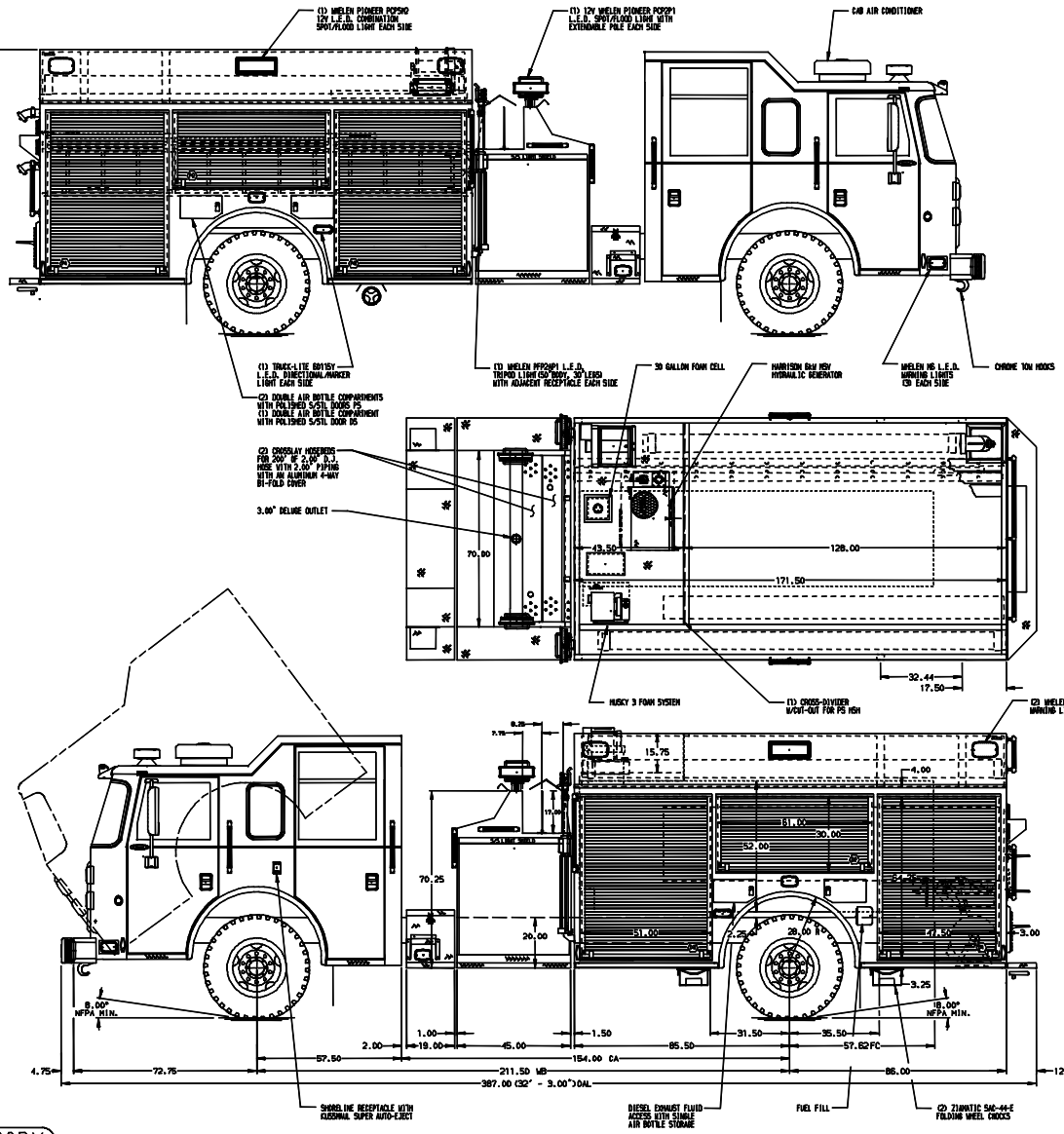

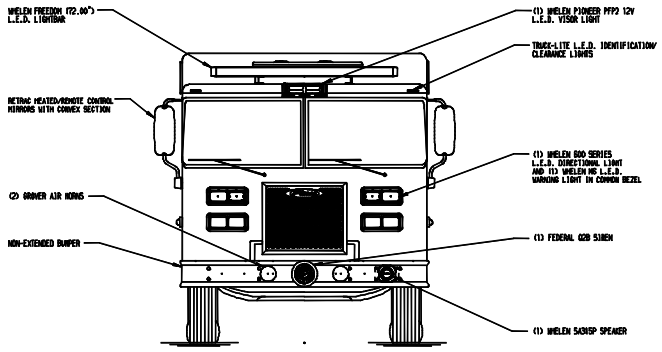

HOSEBED CAPACITIES
1. - 13' DIT HARD SUCTION HOSE
2. - 1200' OF 3.00" D.J. POLY HOSE
3. - 200' OF 2.00" D.J. POLY HOSE
4. - 200' OF 2.50" D.J. POLY HOSE
5. - OPEN STORAGE
6. - 10' DIT HARD SUCTION HOSE W/STRAINER

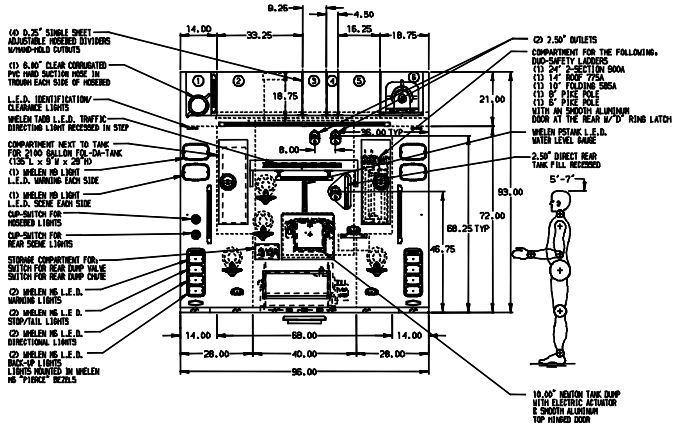

ALUMINUM BODY

NOTE
DIMENSIONS SHOWN ARE APPROXIMATE AND ARE SUBJECT TO MINOR DEVIATIONS AS MAY OCCUR OR BE NECESSARY IN CONSTRUCTION.
MINOR DETAILS NOT SHOWN.

1. ONSPOT AUTOMATIC TIRE CHAINS TO BE PROVIDED AT REAR
2. ALUMINUM TREADPLATE EXTERIOR REAR WALL OF CAB
3. MOUNTING BASE FOR ANTENNA LOCATED PER SHOP ORDER
4. BATTERY CHARGER/AIR COMPRESSOR LOCATED ON FLOOR OF EMS CABINET
5. BATTERY CHARGE INDICATOR LOCATED ON D.S. SEAT RISER
6. PERIMETER SCENE LIGHTS LOCATED PER SHOP ORDER
7. S/STL PROTECTIVE GUARD FOR ROLL-UP DOOR LOCATED ON ALL COMPARTMENT DOORS
8. PIERCE L.E.D. DOME COMPARTMENT LIGHT STRIPS LOCATED PER SHOP ORDER
9. UNPAINTED SHELF TRAYS LOCATED IN COMPARTMENTS D1, D3, P1 & P3
10. TWO ADJUSTABLE SHELFS (FULL DEPTH/FULL WIDTH) IN COMPARTMENTS D1, P1 & P3, THREE IN D3
11. ONE FLOOR MOUNTED INVERTED SLIDE-OUT TRAY IN COMPARTMENT D1
12. SWING-OUT TOOL BOARD WITH PEGBOARD PATTERN IN COMPARTMENT P2
13. RETENTION NETTING IN COMPARTMENT P4
14. ONE ADJUSTABLE VERTICAL PARTITION IN COMPARTMENT P1 & P3
15. L.E.D LIGHT STRIPS LOCATED IN HOSEBED
16. CIRCUIT BREAKER PANEL IN COMPARTMENT D3
17. ONE ACORN ELECTRIC REWIND CORD REEL LOCATED IN FORWARD HOSEBED AREA WITH 200' OF 10/3 CABLE AND CAPTIVE ROLLER ON D5 SIDE SHEET
18. ONE 120V 6-PLACE RECEPTACLE STRIP IN EMS COMPARTMENT
19. RUBRAILS WITH PIERCE LOGO FRONT AND REAR
20. AIR INLET WITH DISCONNECT COUPLING LOCATED ON D5 STEP WELL
21. AIR OUTLET WITH SHUT OFF VALVE LOCATED ON D5 PUMP PANEL
22. STAINLESS STEEL FENDER CROWNS ON CAB AND BODY
23. STAINLESS STEEL LIGHT SHIELD LOCATED ON TOP MOUNT PANEL
24. MIC & SPEAKER COMPARTMENT WITH PLAIN DOOR LOCATED ON TOP MOUNT PANEL
25. HORSTALL DE-40MB REFRIGERATOR LOCATED IN EMS COMPARTMENT
26. ONE MARKLY BOOSTER REEL MODEL EF-4832-19-20 LOCATED IN REAR WALL WITH 200' OF 0.25" HOSE (OPN. 1277482)
27. HORIZONTAL TRACKS IN COMPARTMENT B2

REV	DATE	BY	CH
1	11AUG14	AMI	JBO
2	23JUL14	AMI	JBO

CHASSIS DATA
MAKE: PIERCE
MODEL: SABER

Pierce MANUFACTURING INC.

TITLE: 1250-D-1000 GAL POLY W/30 GAL FOAM CELL, 171" FDLER (2)XLAYS, DELUGE, GENERATOR, LADDERS BESIDE TANK
FOR: PATRICK-HENRY VOLUNTEER FIRE DEPARTMENT PATRICK SPRINGS, VIRGINIA
DWG NO.: 27784AD

JOB NO.: 27784
SCALE: 1:24
DATE:
DRAWN BY: AMI 02MAY14
CHECKED BY: WKL 02MAY14
SHEET SIZE: D
SHEET NO.: 1 OF 1

View File Created 12-AUG-2014 07:28:08