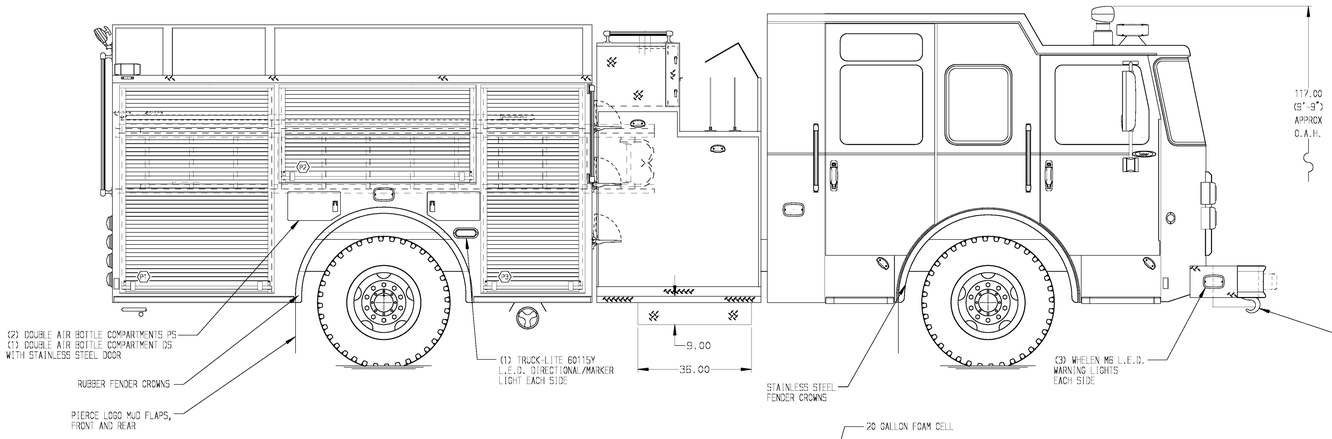

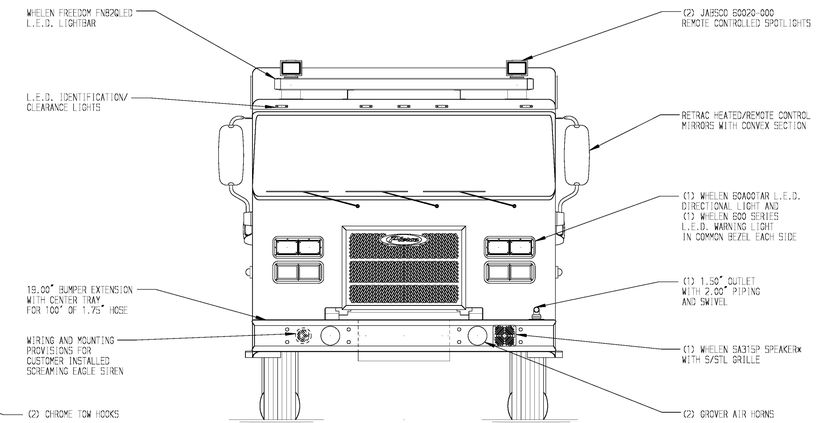

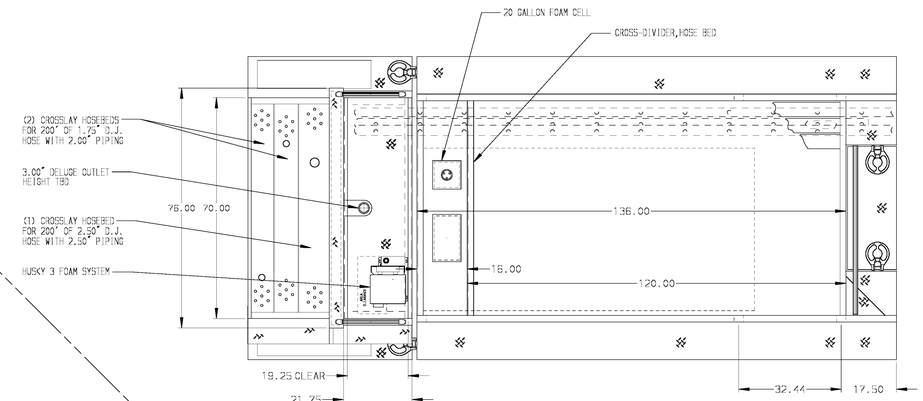

HOSEBED CAPACITIES

1. 500' OF 2.50" D.J. POLY HOSE
2. 500' OF 5.00" D.J. POLY HOSE
3. 500' OF 5.00" D.J. POLY HOSE
4. 500' OF 2.50" D.J. POLY HOSE

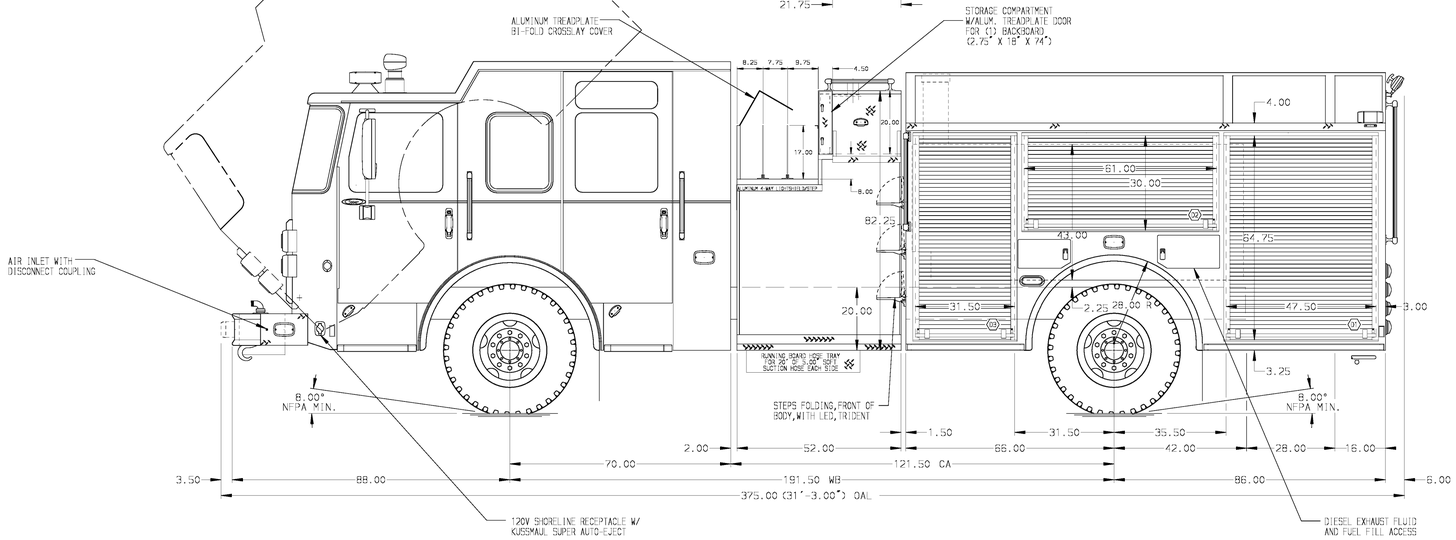

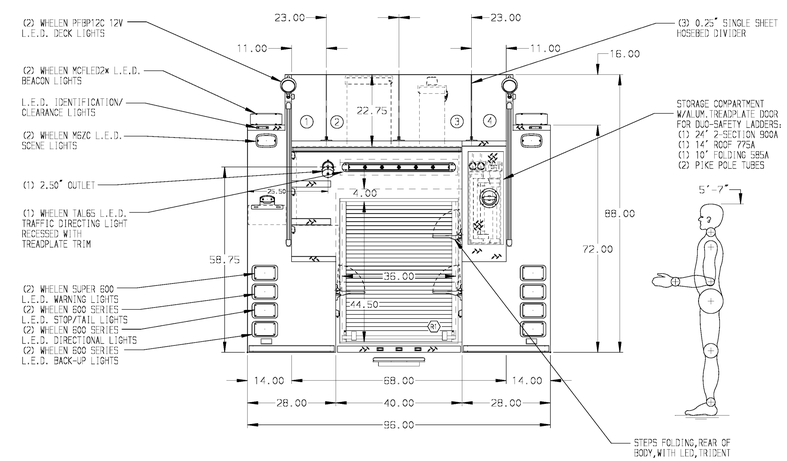

ALUMINUM BODY

NOTE

DIMENSIONS SHOWN ARE APPROXIMATE AND ARE SUBJECT TO MINOR DEVIATIONS AS MAY OCCUR OR BE NECESSARY IN CONSTRUCTION.
MINOR DETAILS NOT SHOWN.

REV	DATE	BY	CH
3	22MAY15	JLA	VMO
2	17APR15	JLA	RWI
1	23MAR15	COL	SMA

CHASSIS DATA
MAKE: PIERCE
MODEL: SABER FR

CUSTOMER APPROVAL

APPROVED BY:

DATE:

Pierce MANUFACTURING INC.

TITLE: 1500-D-750 GAL POLY W/20 GAL FOAM CELL, 152" FDLER (3)CROSSLAYS, DELUGE, HUSKY 3, LADDERS BESIDE TANK

FOR: RENO FIRE DEPARTMENT
RENO, NEVADA

DWG NO. 28577AD

JOB NO.	28577 01-02
SCALE 1:24	DATE
DRAWN BY COL	24FEB15
CHECKED BY SMA	27FEB15
SHEET SIZE D	SHEET NO. 1 OF 1

View File Created 29-MAY-2015 12:58:41