PASSENGER'S SIDE COMPARTMENTS CONTAIN THE FOLLOWING:

COMPARTMENT P1 CONTAINS:
- (1) RACK FOR 14 SCBA BOTTLES
- (1) FLOOR MOUNTED SLIDE OUT TRAY
- (1) 22" DP ADJ SLIDE OUT TILT TRAY
- (1) ADJ STEEL SHELF
- (1) AWNING CONTROL

COMPARTMENT P2 CONTAINS:
- (1) ELECTRIC CORD REEL WITH 200' OF 10/4 YELLOW CORD
- (1) VERTICAL COMPARTMENT DIVIDER
- (1) 42" DP ADJ SLIDE OUT TILT TRAY
- (1) ADJ SHELF
- (1) 15A, 120V DUPLEX RECEPTACLE

COMPARTMENT P3 CONTAINS:
- (2) TWO WAY SLIDE OUT TRAYS WITH TOOLBOARDS
- (1) TRANSVERSE ADJ SHELF
- (1) HORIZONTAL FLOOR EXTENSION

COMPARTMENT P4 CONTAINS:
- (1) FLOOR MOUNTED TRAY
- (2) 2-WAY ADJ SLIDE OUT TRAYS
- (1) 42"DP ADJ SLIDE OUT TILT TRAY

COMPARTMENT P5 CONTAINS:
- (1) CAB LIFT CONTROLLER
- (2) 2-WAY ADJ SLIDE OUT TRAYS
- (1) 42" DP ADJ SLIDE OUT TILT TRAY

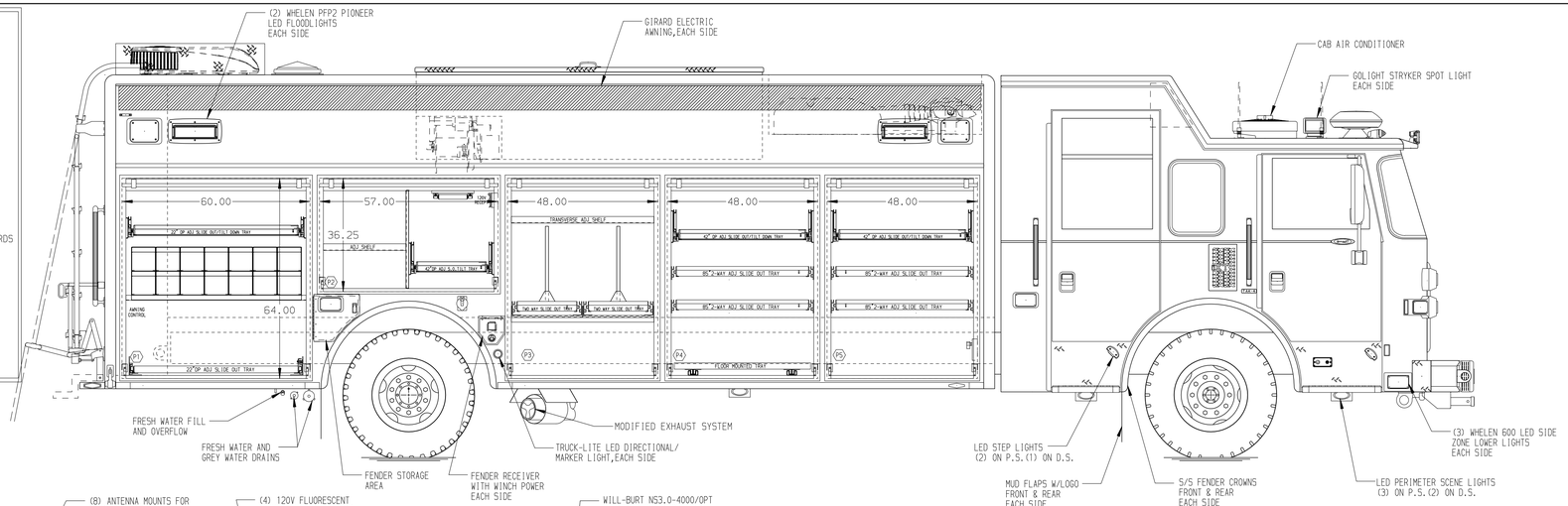

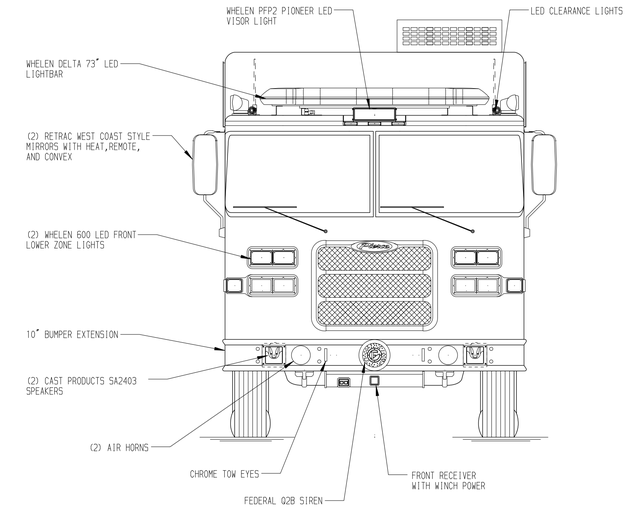

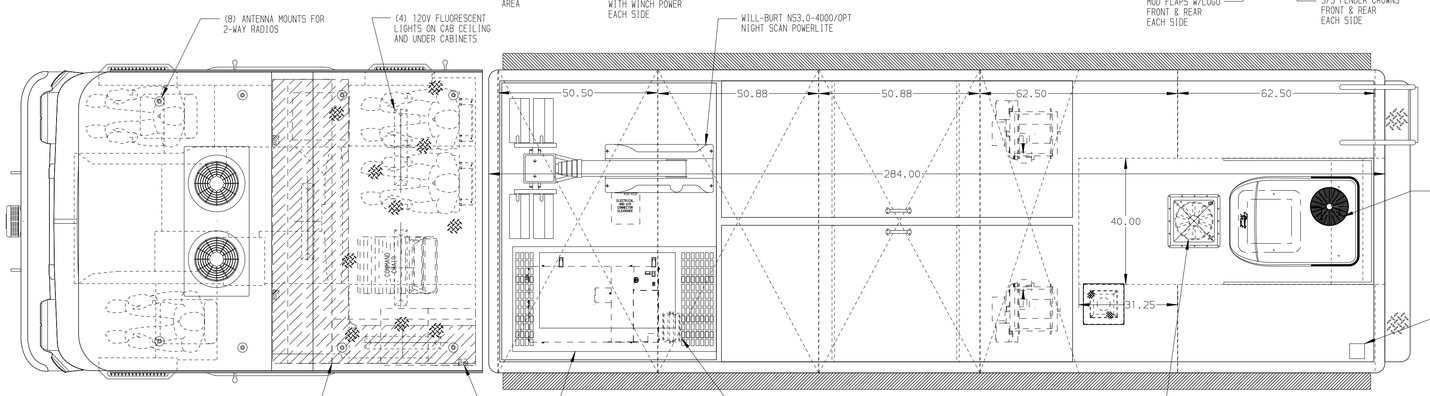

DRIVER'S SIDE COMPARTMENTS CONTAIN THE FOLLOWING:

COMPARTMENT D1 CONTAINS:
- (2) ADJUSTABLE SHELVES
- (1) 22" DP ADJ SLIDE OUT TILT TRAY
- (1) AWNING CONTROL

COMPARTMENT D2 CONTAINS:
- (1) CIRCUIT BREAKER PANEL
- (1) GENERATOR METER PANEL
- (1) NIGHT SCAN CONTROLLER
- (1) ELECTRIC CORD REEL WITH 200' OF 10/4 YELLOW CORD
- (1) VERTICAL COMPARTMENT DIVIDER
- (1) 42" DP ADJ SLIDE OUT TILT TRAY
- (1) 15A, 120V DUPLEX RECEPTACLE
- (1) 15A, 120V 6-PLACE RECEPTACLE STRIP
- (1) SUB FEED BOX
- (1) AUTO TRANSFER SWITCH
- (2) STREAMLIGHTS

COMPARTMENT D3 CONTAINS:
- (1) 3-DRAWER CTECH CABINET
- (2) TWO WAY SLIDE OUT TRAYS WITH TOOLBOARDS
- (1) TRANSVERSE ADJ SHELF
- (1) HORIZONTAL FLOOR EXTENSION

COMPARTMENT D4 CONTAINS:
- (1) FLOOR MOUNTED TRAY
- (2) 2-WAY ADJ SLIDE OUT TRAYS
- (1) 42"DP ADJ SLIDE OUT TILT TRAY

COMPARTMENT D5 CONTAINS:
- (1) KUSSMAUL PUMP PLUS 1200 CHARGER
- (1) 42"DP ADJ SLIDE OUT TILT TRAY
- (2) 2-WAY ADJ SLIDE OUT TRAYS

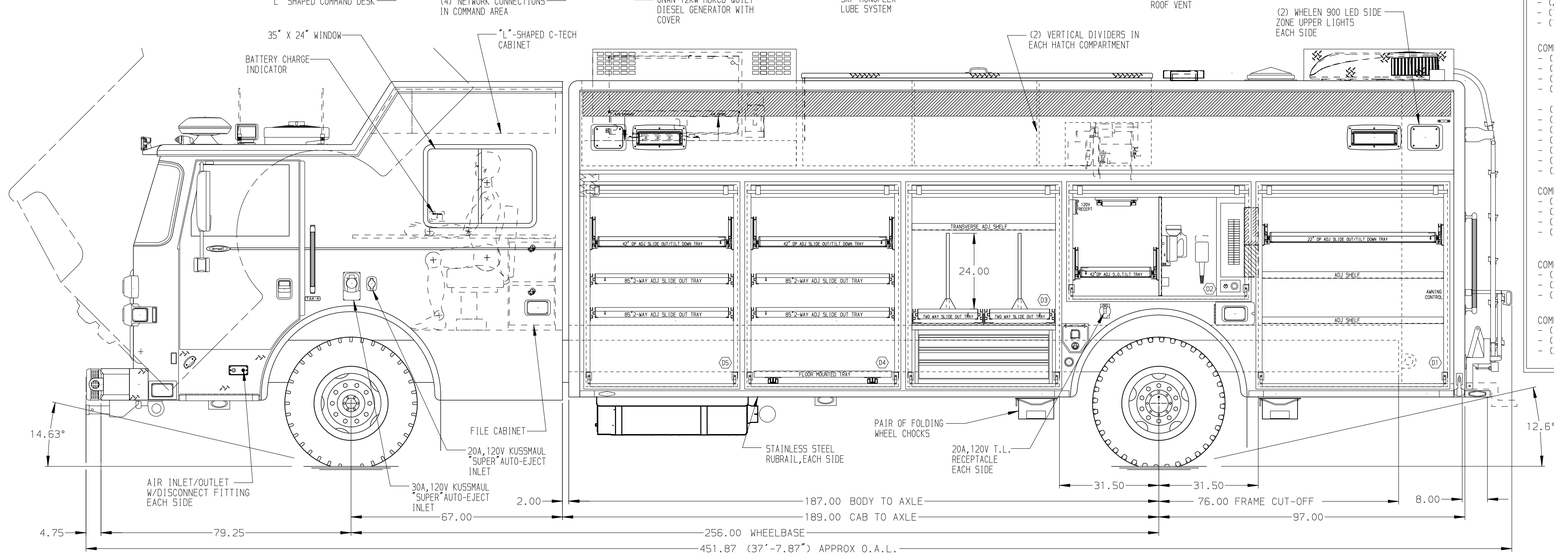

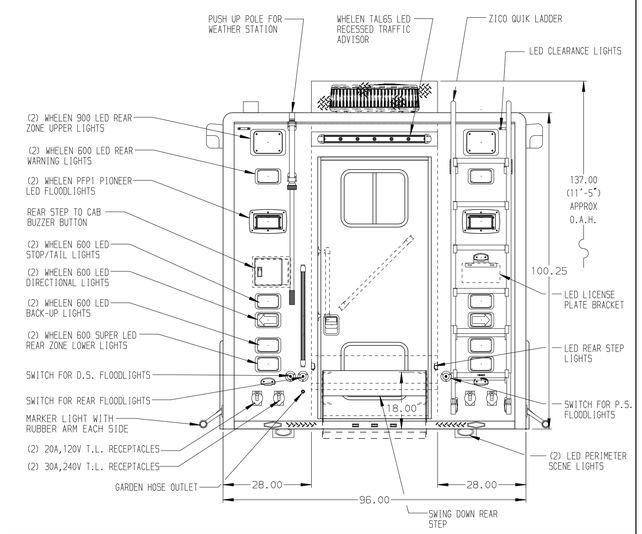

NOTE

DIMENSIONS SHOWN ARE APPROXIMATE AND ARE SUBJECT TO MINOR DEVIATIONS AS MAY OCCUR OR BE NECESSARY IN CONSTRUCTION.
MINOR DETAILS NOT SHOWN.

NOTES:
1. WARN 9,000# PORTABLE WINCH
2. ALUMINUM TREADPLATE ON COMMAND CAB ROOF
3. FLOOR IN CAB AND CREW CAB TO BE PADDED RUBBER
4. S/S SCUFFPLATES ON CAB AND COMMAND CAB DOOR JAMBS
5. (4) STREAMLIGHT HANDLIGHTS LOCATED UNDER FORWARD FACING CREW CAB SEATS
6. (1) 15A,120V 6-PLACE RECEPTACLE LOCATED IN COMMAND CAB
7. DAVID CLARK 5 POSITION INTERCOM SYSTEM
8. S/S "L"-SHAPED GUARDS OVER ALL ROLL-UP DOORS
9. ON SCENE DUAL LED LIGHT STRIPS IN ALL BODY COMPARTMENTS,SINGLE STRIP LIGHT IN EACH BODY HATCH COMPARTMENT
10. TURTLE TILE MATTING ON HATCH COMPARTMENT FLOORS AND ON ALL SHELVES AND TRAYS AND ON FLOORS IN COMPARTMENTS D1.D5,P3 & P5
11. NORCOLD REFRIGERATOR LOCATED IN COMMAND CAB UNDER DESK
12. ELECTRIC DOOR LOCKS ON ALL BODY ROLL-UP DOORS
13. 15A,120V 5-PLACE RECEPTACLE STRIP LOCATED IN EACH UPPER HATCH COMPARTMENT

CLEAR DOOR WIDTH KEY

AMDOR ROLL UP DOORS:	-1 7/8"
GORTITE ROLL UP DOORS:	-2 3/4"
PIERCE DOUBLE LAP DOORS:	-4 1/4"
PIERCE LIFT-UP LAP DOORS:	-1 1/2"

(EX: 60"F-F - 1 7/8"- 58 1/8" CLEAR)
(F-F)= FRAME TO FRAME

REV	DATE	BY	CH
1	07JUN16	DHE	CDK
2	28APR16	DHE	CDK
3	09MAR16	SBR	CDK

CHASSIS DATA
MAKE: PIERCE
MODEL: AX6720

Pierce MANUFACTURING INC.

TITLE: HEAVY DUTY RESCUE WALKIN/NON-WALKIN COMBO
FOR: SAN DIEGO FIRE DEPARTMENT SAN DIEGO, CA
DWG NO.: 29678AD-SH1

JOB NO.	29678
SCALE	1:24
DATE	
DRAWN BY	DHE 22FEB16
CHECKED BY	CDK 23FEB16
SHEET SIZE	D
SHEET NO.	1 OF 2

View File Created 07-JUN-2016 11:50:44