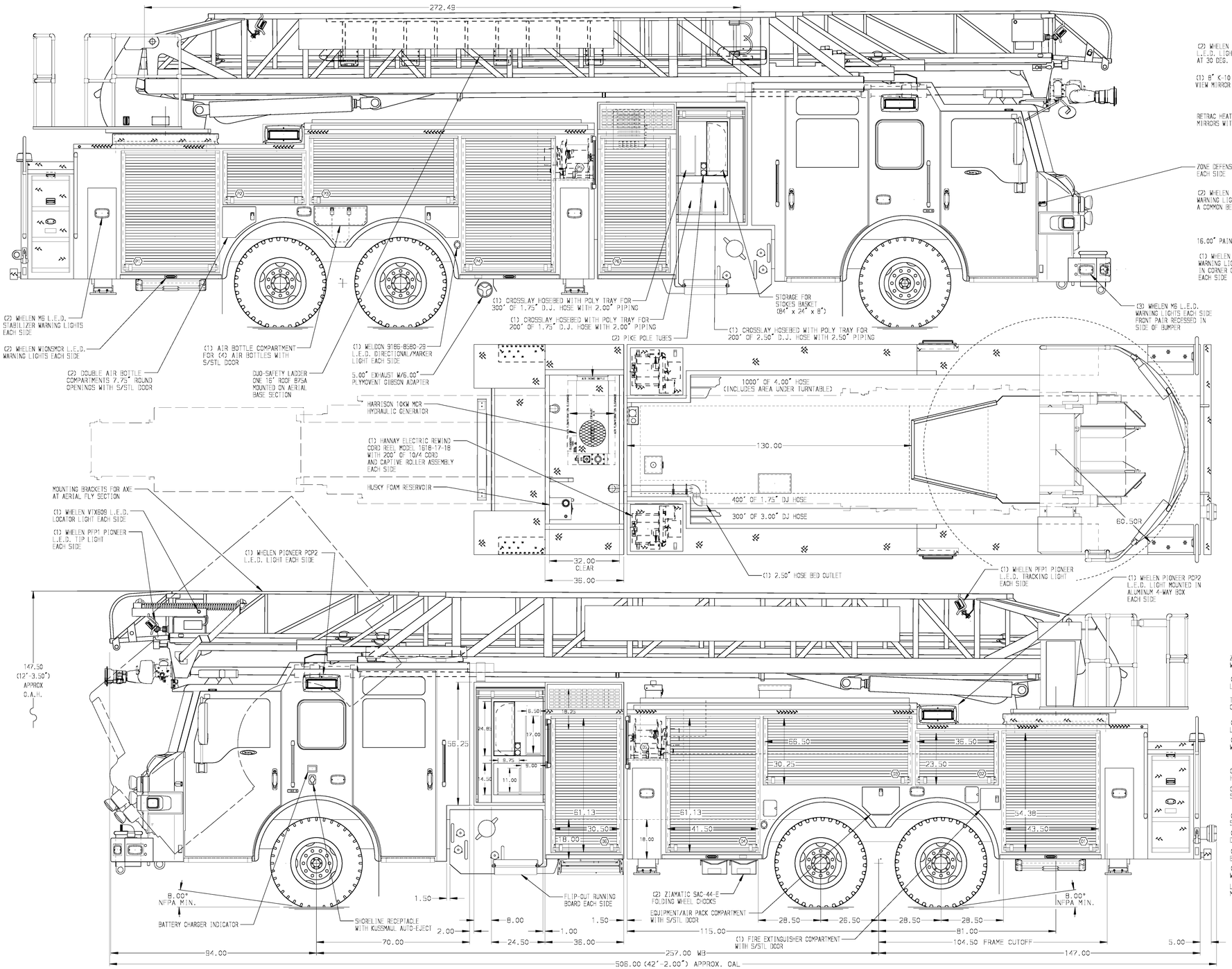

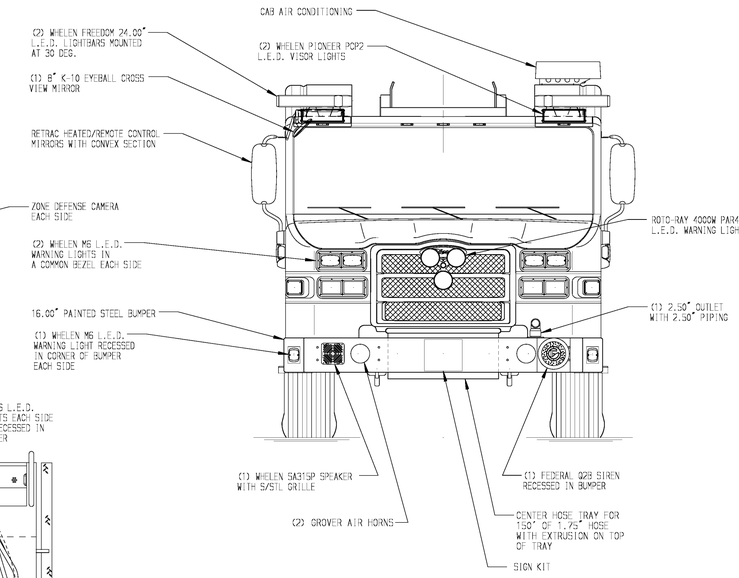

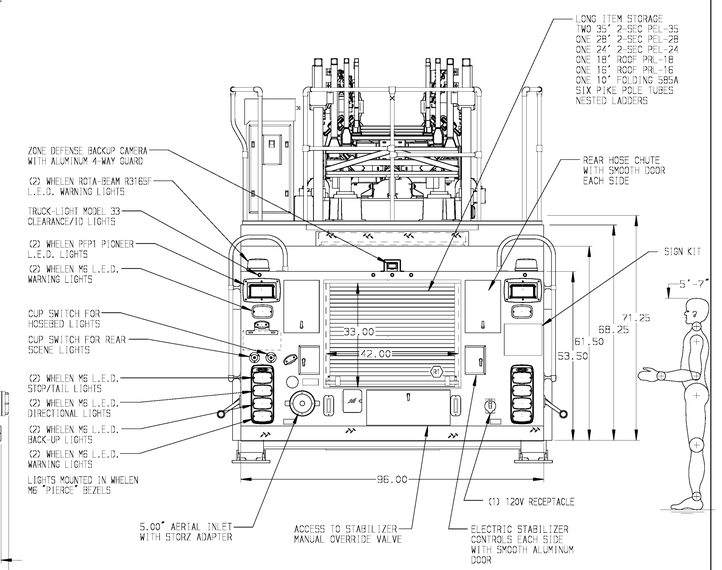

ALUMINUM BODY

SIDE ROLL AND FRONTAL IMPACT PROTECTION

NOTE

DIMENSIONS SHOWN ARE APPROXIMATE AND ARE SUBJECT TO MINOR DEVIATIONS AS MAY OCCUR OR BE NECESSARY IN CONSTRUCTION.
MINOR DETAILS NOT SHOWN.

1. BATTERY CHARGER & AIR COMPRESSOR LOCATED BEHIND DRIVER'S SEAT
2. AIR INLET/OUTLET WITH DISCONNECT FITTING LOCATED ON THE DRIVER SIDE PUMP PANEL
3. ONE ADJUSTABLE FULL WIDTH/FULL DEPTH SHELF IN COMPARTMENT 1-D1,1-D2,1-D4,1-P3,1-P4, TWO IN P1, FIVE IN P6
4. ONE FLOOR MOUNTED SLIDE-OUT TRAY IN COMPARTMENTS D1,D4,P1,P4
5. ONE SLIDE-OUT ALUMINUM TOOL BOARD WITH PEGBOARD IN COMPARTMENT P6
6. ONE VERTICAL PARTITION IN COMPARTMENTS P6
7. ONE 3/16" ALUMINUM MOUNTING PLATE IN COMPARTMENT D1,D3,D4,P1,P4
8. HORIZONTAL EQUIPMENT MOUNTING TRACKS IN COMPARTMENT D1,D3,D4,P1,P4
9. CIRCUIT BREAKER PANEL IN COMPARTMENT D4
10. ONE 12V L.E.D. LIGHT STRIP LOCATED ON EACH SIDE IN THE HOSEBED
11. REMOTE LADDER CONTROLS AT AERIAL TIP
12. L.E.D. LIGHTING ON AERIAL LADDER SECTIONS
13. 2-WAY INTERCOM SYSTEM BETWEEN AERIAL TIP AND TURNTABLE
14. AERIAL PEDESTAL RAISED 3.00"
15. 45° LIMITED RETRACTION
16. LIFTING EYE RESCUE ATTACHMENT AT AERIAL TIP
17. UNPERPULLEY RESCUE SYSTEM AT AERIAL TIP
18. 6-PLACE 20A 120V RECEPTACLE STRIP IN EMS COMPARTMENT
19. ONE 20A 120V RECEPTACLE IN COMPARTMENT D4

REV	DATE	BY	CH
V	06JAN16	JGA	JGO
V	20NOV15	TKA	JGO
V	08OCT15	TKA	JBL

CHASSIS DATA
MAKE: PIERCE
MODEL: VELOCITY FR 7010
DWG NO.: 29345AD

Pierce MANUFACTURING INC.

TITLE: 100 AERIAL LADDER & BODY ASSEMBLY
530 GALLON TANK 500 GAL. WATER / 30 GAL. FOAM

FOR: SPOTSYLVAINA COUNTY FIRE, RESCUE & EMERGENCY
SPOTSYLVANIA, VA

JOB NO.	29345
SCALE	1:24
DATE	
DRAWN BY	TKA 17SEP15
CHECKED BY	JBL 21SEP15
SHEET SIZE	D
SHEET NO.	1 OF 1

View File Created 07-JAN-2016 14:59:00