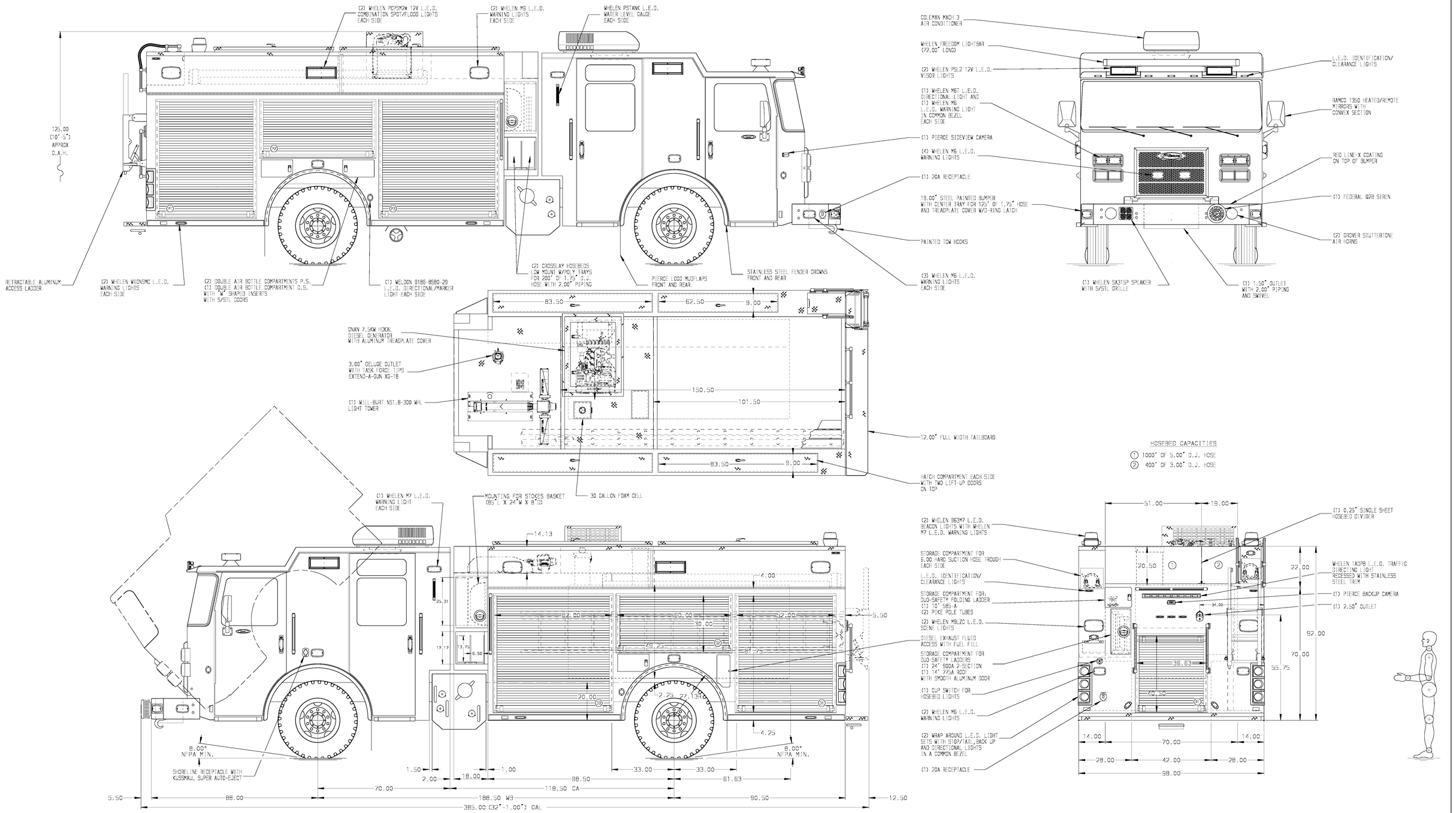

ALUMINUM BODY

NOTE

DIMENSIONS SHOWN ARE APPROXIMATE AND ARE SUBJECT TO MINOR DEVIATIONS AS MAY OCCUR OR BE NECESSARY IN CONSTRUCTION.
MINOR DETAILS NOT SHOWN.

1. DTF WHEEL CHOCKS AND MOUNTING BRACKETS
2. MOUNTING BASE FOR ANTENNA LOCATED PER SHOP ORDER
3. KUSSMAUL BATTERY CHARGER/AIR COMPRESSOR LOCATED IN COMPARTMENT BEHIND DRIVER'S SEAT
4. BATTERY CHARGE INDICATOR LOCATED ON D.S. SEAT RISER
5. PERIMETER SCENE LIGHTS LOCATED PER SHOP ORDER
6. ONE 12V L.E.D. LIGHT STRIP LOCATED ON EACH SIDE IN THE HOSEBED
7. PIERCE L.E.D. DUAL COMPARTMENT LIGHT STRIPS LOCATED PER SHOP ORDER
8. SHELF TRACK LOCATED IN COMPARTMENTS D1,D2,D3,P1,P2,P3,R1
9. ONE FULL WIDTH/DEPTH PAINTED ADJUSTABLE SHELF IN COMPARTMENTS D1,P1
10. ONE ADJUSTABLE TILTING SLIDE-OUT TRAY IN COMPARTMENT P3
11. ONE FLOOR MOUNTED SLIDE-OUT TRAY IN COMPARTMENT D1,P1,P3,R1
12. ALUMINUM SWING-OUT TOOLBOARD WITH PAC TRAC IN COMPARTMENTS D2,P2
13. ALUMINUM SLIDE-OUT TOOLBOARD WITH PEGBOARD PATTERN IN COMPARTMENT D3
14. CIRCUIT BREAKER PANEL IN COMPARTMENT R1
15. AIR INLET WITH DISCONNECT COUPLING IN D.S. STEP WELL
16. FOAM PRO 1600 FOAM SYSTEM
17. POWER CONVERTER LOCATED IN COMPARTMENT D3

REV	DATE	BY	CH
1	10JUL15	JWC	ANG
2	10JUN15	JWC	ANG
3	01MAY15	JWC	MNE

CHASSIS DATA
MAKE: PIERCE
MODEL: SABER FR

Pierce MANUFACTURING INC.

TITLE: 1500-D-970P W/30G FOAM,188" PUC BODY (2) X-LAYS,DELUGE,GENERATOR,LIGHT TOWER,CORD REEL
FOR: SUMTER COUNTY FIRE DEPARTMENT AMERICUS, GEORGIA
DWG NO.: 28860AD

JOB NO.	28860 01-04
SCALE	1:24
DATE	
DRAWN BY	JWC 14APR15
CHECKED BY	MNE 14APR15
SHEET SIZE	D
SHEET NO.	1 OF 1

View File Created 13-JUL-2015 08:56:43