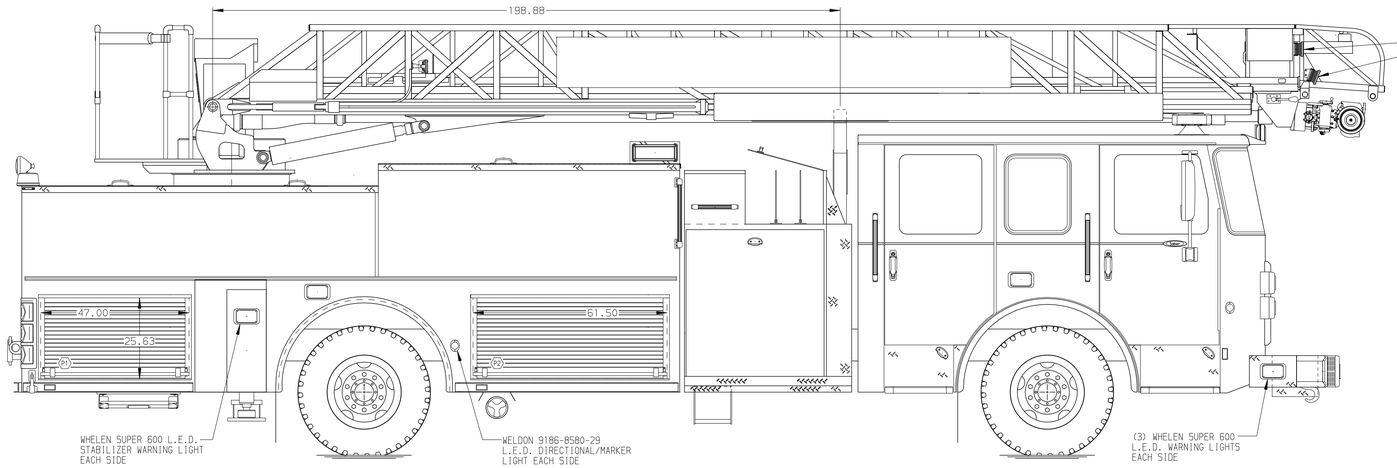

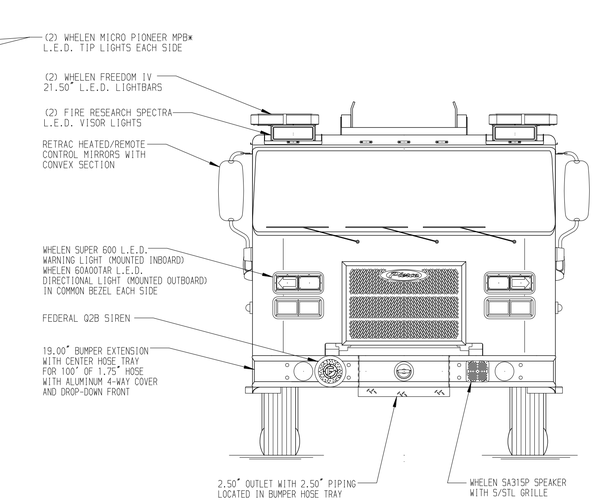

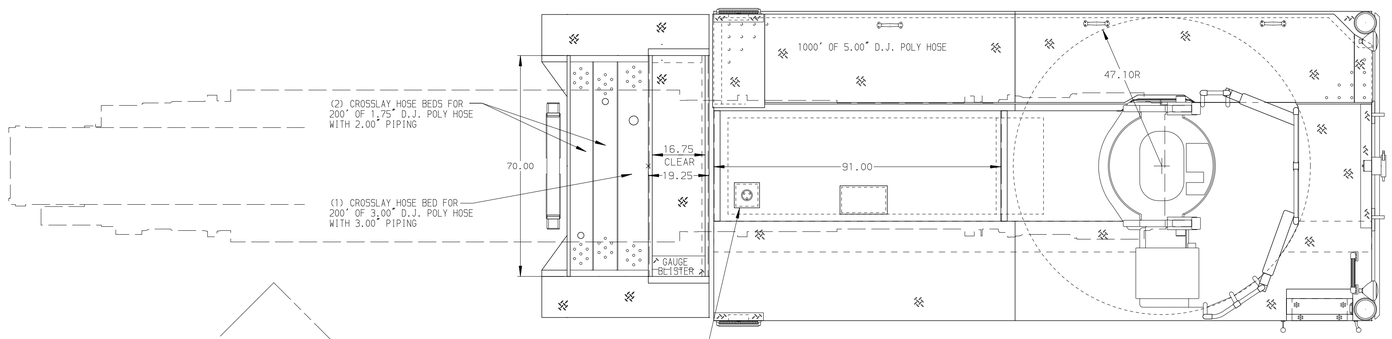

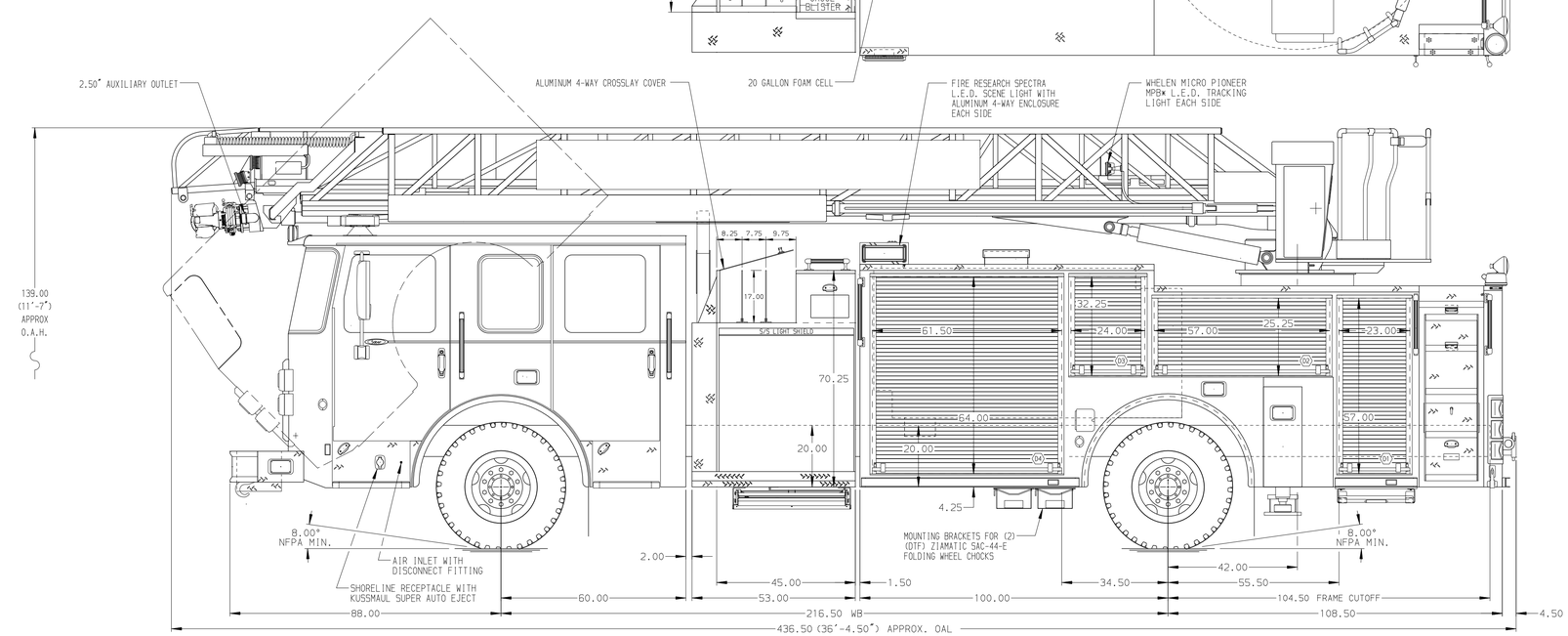

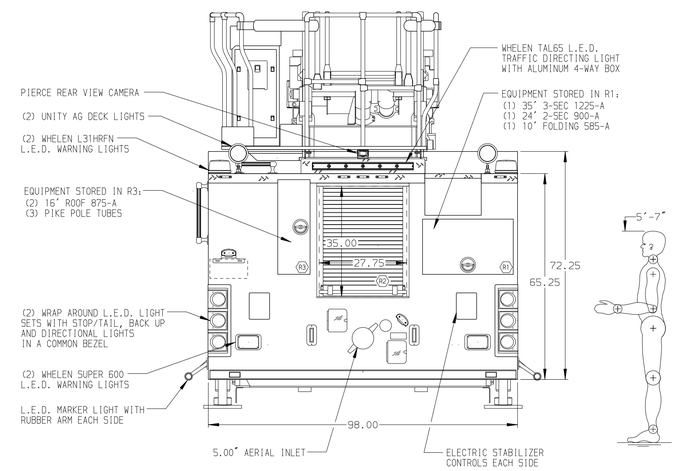

ALUMINUM BODY

NOTE

DIMENSIONS SHOWN ARE APPROXIMATE AND ARE SUBJECT TO MINOR DEVIATIONS AS MAY OCCUR OR BE NECESSARY IN CONSTRUCTION.
MINOR DETAILS NOT SHOWN.

1. AERIAL PEDESTAL RAISED 1.50"
2. BATTERY CHARGER LOCATED IN COMPARTMENT D4
3. BATTERY CHARGE INDICATOR LOCATED ON D.S. SEAT RISER
4. ADJUSTABLE FULL WIDTH/FULL DEPTH SHELF - TWO IN COMPARTMENT D1,THREE IN D4
5. ONE FLOOR MOUNTED SLIDE-OUT TRAY IN COMPARTMENTS D4,P1
6. TRIDENT FOLDING STEPS MOUNTED ON AERIAL DEVICE PER SHOP ORDER
7. TECNIQ L.E.D. RUNG STYLE LIGHTING ON BOTTOM OF AERIAL EGRESS
8. 2-WAY INTERCOM SYSTEM BETWEEN AERIAL TIP AND TURNTABLE
9. REMOTE MONITOR CONTROLS LOCATED IN COMPARTMENT D4
10. ONE SWING-OUT ALUMINUM TOOL BOARD IN COMPARTMENT D2

REV	DATE	BY	CH
7	24JUN16	SHU	JGO
6	20MAY16	SHU	JGO

CHASSIS DATA
MAKE: PIERCE
MODEL: SABER FR

Pierce MANUFACTURING INC.

TITLE: 75 AERIAL LADDER & BODY ASSEMBLY (75 HAL)
520 GALLON TANK 500 GAL. WATER/20 GAL. FOAM
FOR: TUSKEGEE FIRE DEPARTMENT
TUSKEGEE, AL

DWG NO.: 29974AD

JOB NO.	29974
SCALE	1:24
DATE	
DRAWN BY	SHU 28MAR16
CHECKED BY	GRM 29MAR16
SHEET SIZE	D
SHEET NO.	1 OF 1

View File Created 27-JUN-2016 12:52:25