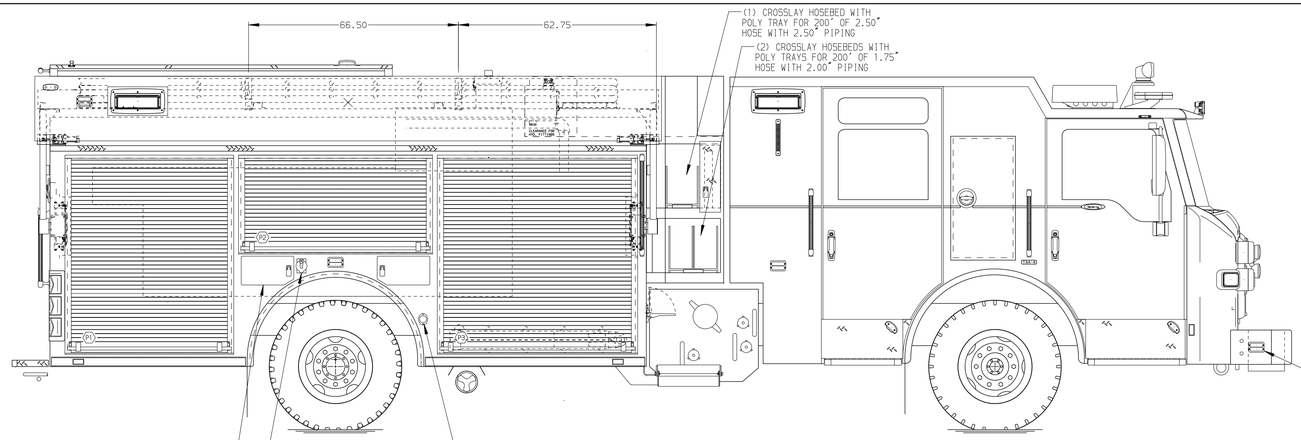

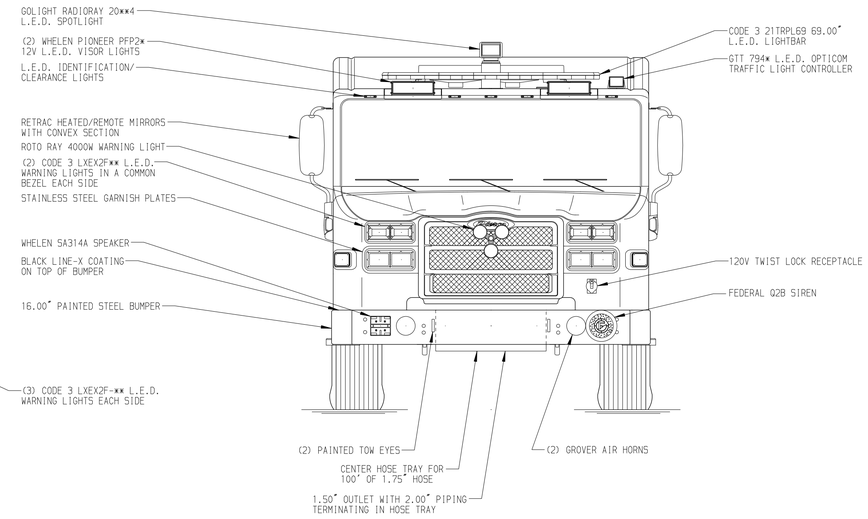

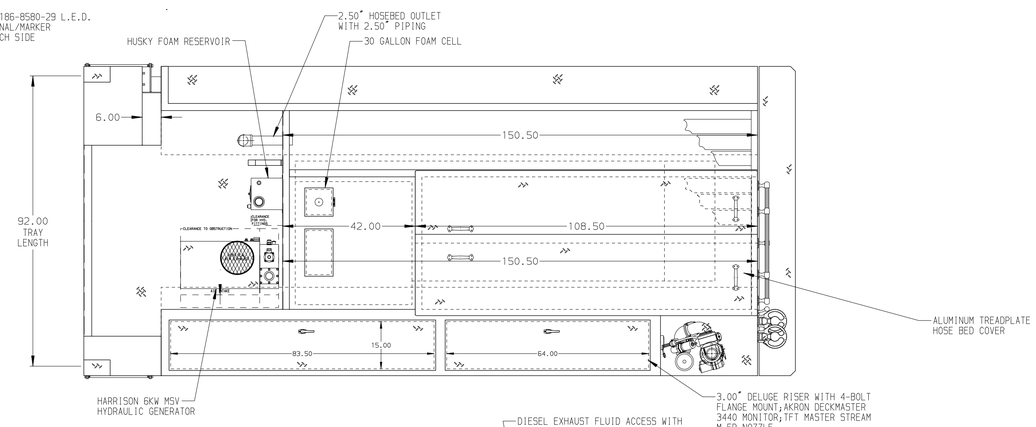

HOSEBED CAPACITIES

1. 450' OF 2.50" D.J. POLY HOSE
2. 1000' OF 5.00" D.J. POLY HOSE
3. 300' OF 2.50" D.J. POLY HOSE

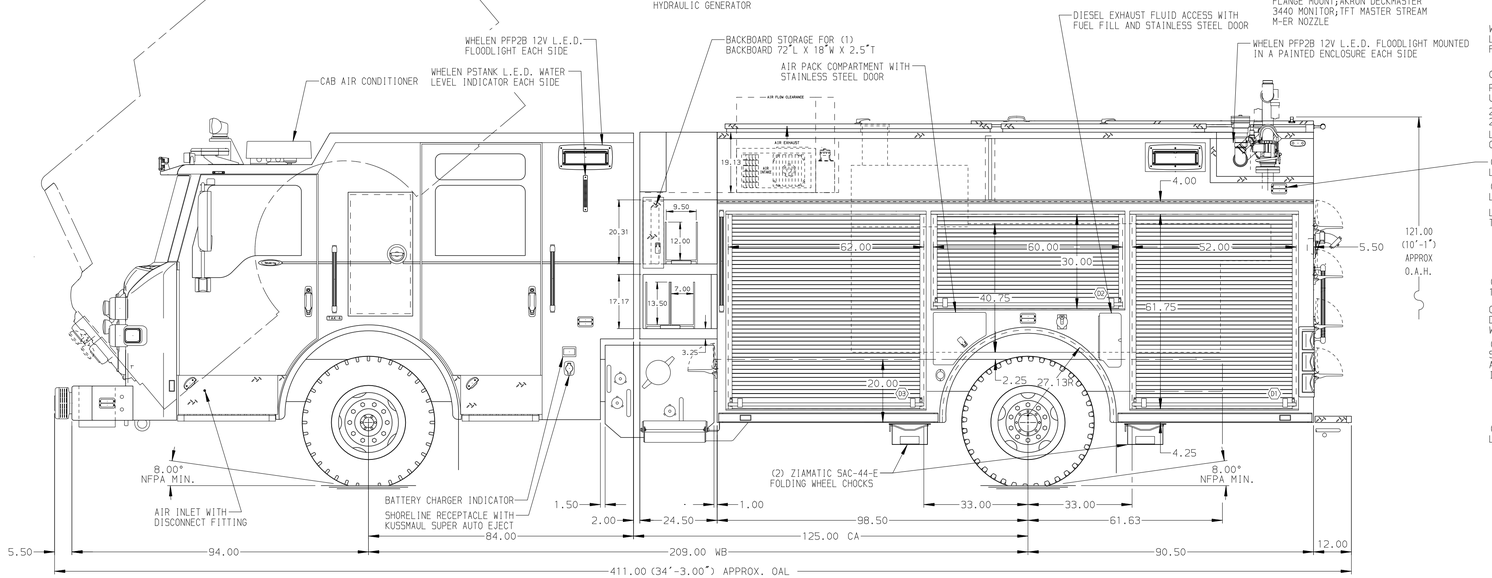

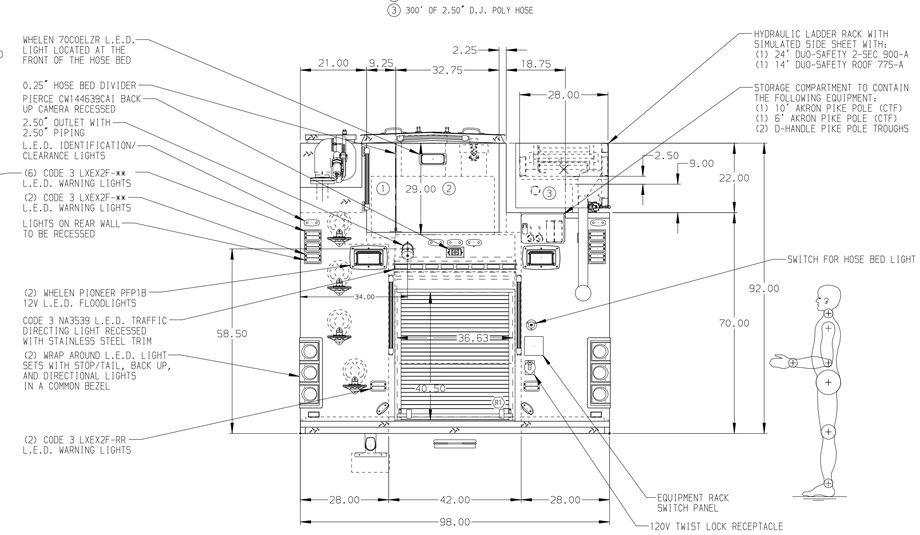

ALUMINUM BODY

SIDE ROLL & FRONTAL IMPACT PROTECTION

NOTE

DIMENSIONS SHOWN ARE APPROXIMATE AND ARE SUBJECT TO MINOR DEVIATIONS AS MAY OCCUR OR BE NECESSARY IN CONSTRUCTION.
MINOR DETAILS NOT SHOWN.

1. VOGEL LUBE SYSTEM PUMP LOCATED PER SHOP ORDER
2. MOUNTING BASE FOR ANTENNA LOCATED PER SHOP ORDER
3. BATTERY CHARGER LOCATED IN COMPARTMENT-D3
4. FOUR AMDOR LUMA BAR AY-9500-020 L.E.D. PERIMETER SCENE LIGHTS LOCATED PER SHOP ORDER
5. PIERCE L.E.D. LIGHT STRIPS LOCATED IN ALL SPECIFIED BODY COMPARTMENTS
6. L.E.D. STRIP LIGHTS LOCATED IN ALL SPECIFIED HATCH COMPARTMENTS
7. 500 LB. FULL WIDTH/DEPTH ADJUSTABLE SHELVES IN COMPARTMENT-D1,D3,P1,P3
8. 215 LB. ADJUSTABLE TILT/SLIDE-OUT TRAYS IN COMPARTMENT-D1,D2,D3,P2
9. 500 LB. FLOOR MOUNTED SLIDE-OUT TRAYS WITH 2" SIDES IN COMPARTMENT-D1,P1,R1
10. ALUMINUM SLIDE-OUT TOOLBOARD WITH PEGBOARD PATTERN IN COMPARTMENT-TWO IN P3
11. VERTICAL PARTITION IN COMPARTMENT-P3
12. LITTLE GIANT REVOLUTION XE 12017 MODEL 17 LADDER IN COMPARTMENT-P3
13. CIRCUIT BREAKER PANEL IN COMPARTMENT-D3

REV	DATE	BY	CH
7	11JUN15	BST	COR
6	14MAY15	BST	COR
5	03APR15	BST	COR
4	13FEB15	BST	CDU

CHASSIS DATA
MAKE: PIERCE
MODEL: VELOCITY FR

Pierce MANUFACTURING INC.

TITLE: 1500-D-780P W/30 GAL. FOAM CELL; (3) CROSSLAYS 189" PUC RESCUE BODY; DELUGE; HYDRAULIC LADDER RACK
FOR: WHEAT RIDGE FIRE PROTECTION DISTRICT, WHEAT RIDGE, CO
DWG NO.: 28680AD

JOB NO.	28680
SCALE	1:24
DATE	31DEC14
DRAWN BY	BST
CHECKED BY	CDU
14JAN15	
SHEET SIZE	D
SHEET NO.	1 OF 1

View File Created 15-JUN-2015 07:19:25