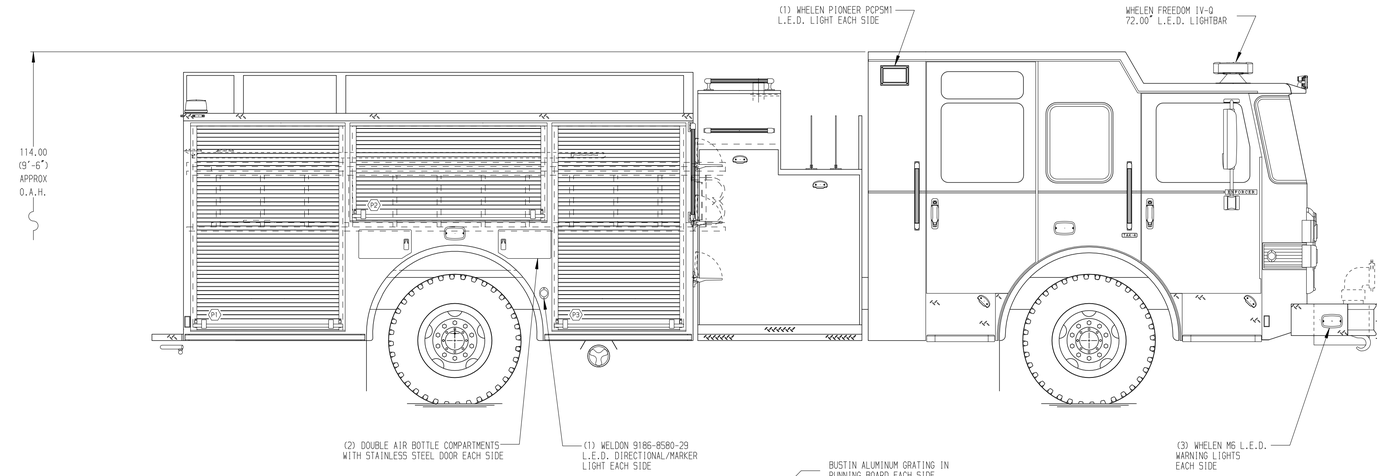

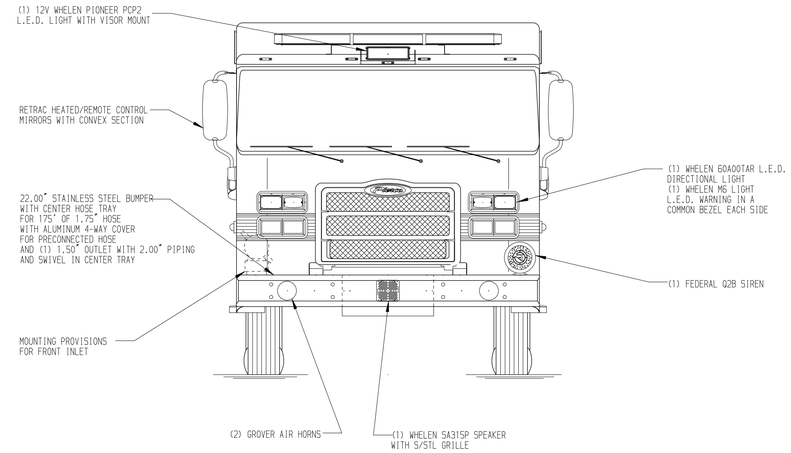

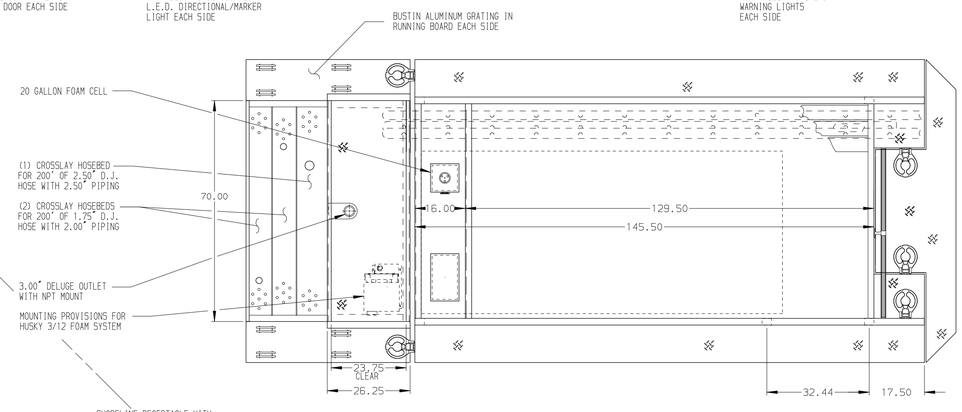

HOSEBED CAPACITIES

1. 1000' OF 5.00" D.J. HOSE
2. 500' OF 3.00" D.J. HOSE
3. 500' OF 3.00" D.J. HOSE

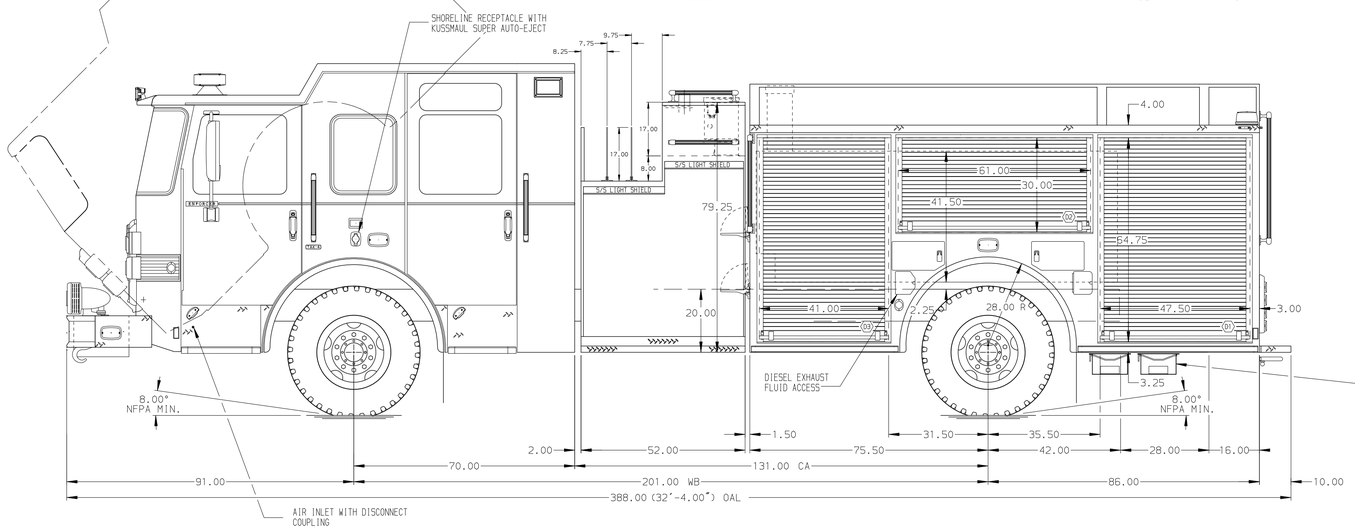

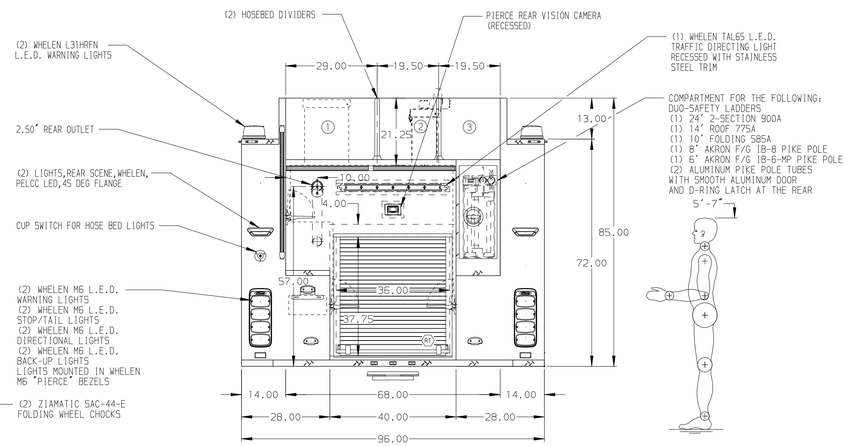

ALUMINUM BODY

Pierce MANUFACTURING INC.

JOB NO.	29528
SCALE	1:24
DATE	
DRAWN BY	TES 11NOV15
CHECKED BY	KBO 12NOV15
SHEET SIZE	D
SHEET NO.	1 OF 1

TITLE: 1500-D-770P 750G WATER W/20G FOAM 161"BODY FH FDLER (3) XLAYS, LADDERS NEXT TO TANK, DELUGE

FOR: PIERCE FIELD UNIT
APPLETON, WISCONSIN

CHASSIS DATA — MAKE: PIERCE — MODEL: ENFORCER

DWG NO.: 29528AD

REV	DATE	BY	CH
B	29FEB16	TES	THS
A	02FEB16	TES	THS

NOTE

DIMENSIONS SHOWN ARE APPROXIMATE AND ARE SUBJECT TO MINOR DEVIATIONS AS MAY OCCUR OR BE NECESSARY IN CONSTRUCTION.
MINOR DETAILS NOT SHOWN.

1. BATTERY CHARGER LOCATED BEHIND DRIVER SEAT
2. FOUR WHELEN 01-0660068-00 12V L.E.D. LIGHTS LOCATED IN THE HOSE BED
3. AMDOR LUMABAR H20 AY-9500-040 40.00" L.E.D. HOSE BED LIGHTS
4. S/STL PROTECTIVE GUARD FOR ROLL-UP DOOR ON ALL BODY COMPARTMENTS
5. ONE FULL WIDTH/DEPTH PAINTED ADJUSTABLE SHELF IN THE UPPER PORTION OF COMPARTMENTS D1, D3, P1, P3, AND IN THE CENTER PORTION OF D2, AND P2
6. ONE ADJUSTABLE SLIDE-OUT TRAY IN COMPARTMENTS D1, D3, P1, AND P3

View File Created 29-FEB-2016 15:03:39