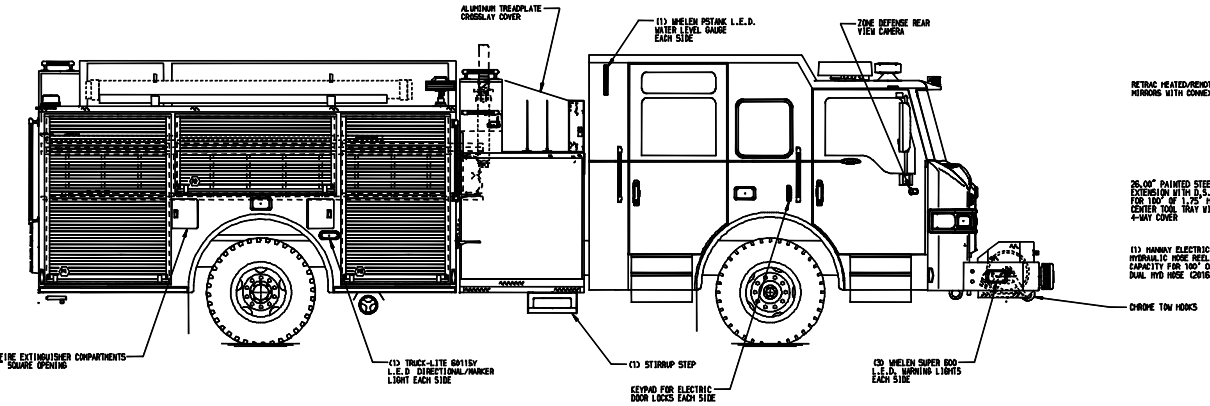

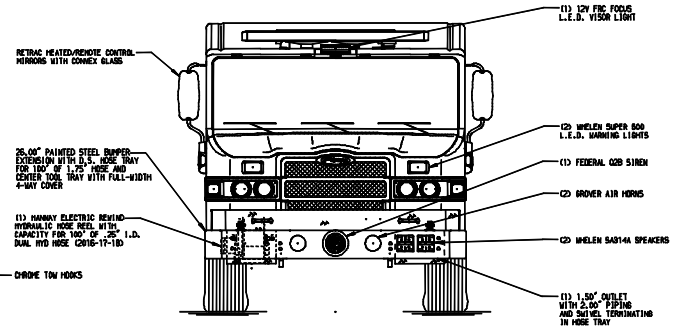

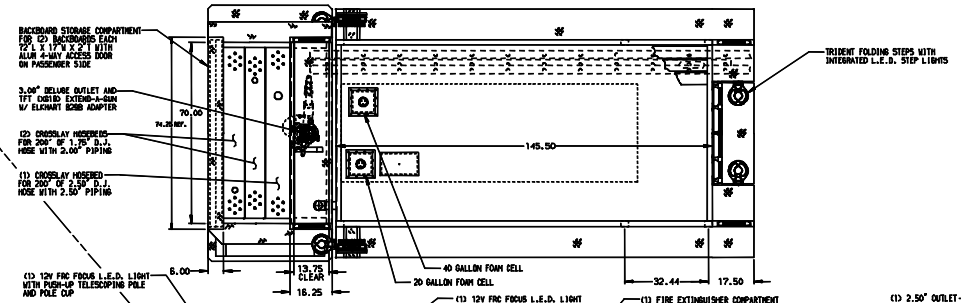

HOSEBED CAPACITIES
(1) 250' OF 2.50" D.J. POLY HOSE
(2) 100' OF 1.00" D.J. POLY HOSE
(3) 800' OF 2.50" D.J. POLY HOSE

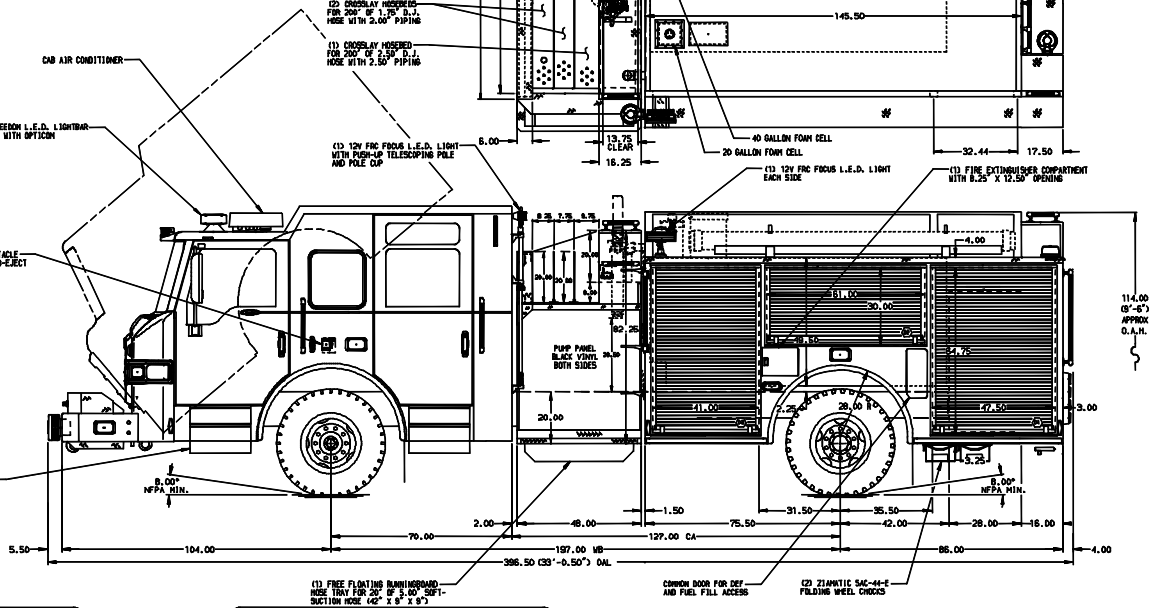

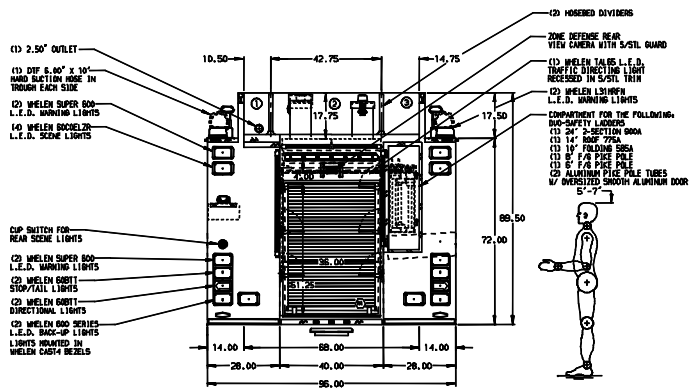

ALUMINUM BODY

MAXIMUM O.A.H. 114.00"

NOTE

DIMENSIONS SHOWN ARE APPROXIMATE AND ARE SUBJECT TO MINOR DEVIATIONS AS MAY OCCUR OR BE NECESSARY IN CONSTRUCTION.
MINOR DETAILS NOT SHOWN.

1. PRELIMINARY PUMP PANEL LAYOUT DRAWING REQUIRED
2. ONE AIR INLET/ OUTLET WITH DISCONNECT FITTING LOCATED ON D.S. PUMP PANEL
3. PIERCE LOGO NAMEPLATE LOCATED FRONT AND REAR
4. S/STL FENDER CROWNS LOCATED FRONT AND REAR
5. MOUNTING BASE FOR ANTENNA LOCATED PER SHOP ORDER
6. CUSHMAN BATTERY CHARGER LOCATED BEHIND DRIVERS SEAT
7. DISPLAY BAR GRAPH FOR BATTERY CHARGER LOCATED ON D.S. SEAT RISER
8. ONE FLOOR MOUNTED SLIDE-OUT TRAY IN COMPARTMENTS P3 & R1
9. ONE ADJUSTABLE TILTING SLIDE-OUT TRAY WITH CABLE RELEASE IN COMPARTMENTS D1, D2 & D3
10. SWING-OUT TOOL BOARD WITH PEGBOARD PATTERN IN COMPARTMENT P1
11. ONE TWO-DRAWER TOOL CABINET WITH POLY LINED DRAWERS IN COMPARTMENT D3
12. SMOOTH ALUMINUM TOOL BOARD WITH TRACKS ON REAR WALL OF COMPARTMENT P3
13. ONE ADJUSTABLE SHELF IN COMPARTMENTS D1, P3, & R1
14. SHELF TRACKS LOCATED IN ALL BODY COMPARTMENTS
15. HORIZONTAL EQUIPMENT MOUNTING TRACKS IN COMPARTMENT P2
16. PERIMETER SCENE LIGHTS LOCATED PER SHOP ORDER
17. MOUNTING PROVISIONS FOR CTP HURST HYDRAULIC POWER UNIT ON TRAY IN COMPARTMENT P3
18. S/STL SCUFFPLATES ON CAB DOOR JAMBS
19. ONE ADJUSTABLE SLIDE-OUT TRAY IN COMPARTMENT R1

REV	DATE	BY	CH
1	04APR13	COL	JBO

CUSTOMER APPROVAL
APPROVED BY: _____
DATE:

PIERCE MANUFACTURING INC.

CHASSIS DATA	TITLE	1250-D-750P, 161" LONG BODY, 48" SIDE CONTROL (3) X-LAYS, LADDERS BESIDE TANK, HYD REEL IN BUMPER	JOB NO. 26570
MAKE PIERCE	FOR	POLK COUNTY FIRE DEPARTMENT BARTOW, FL	SCALE 1:24 / DATE
MODEL VEL7010	DWG NO.	26570AD	DRAWN BY COL / 09FEB13
			CHECKED BY MNE / 12FEB13
			SHEET SIZE D / SHEET NO. 1 OF 1

View File Created 04-APR-2013 13:54:41