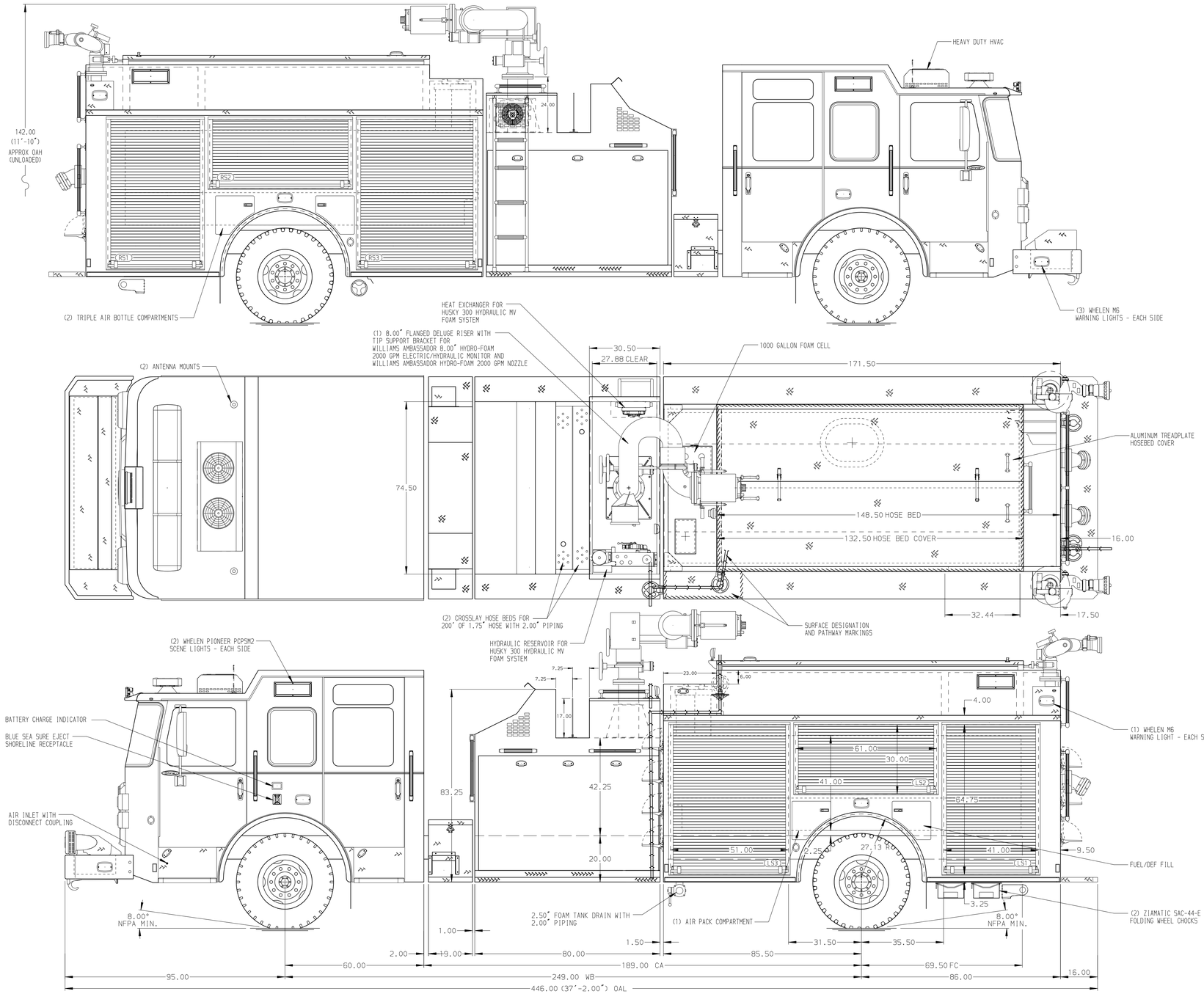

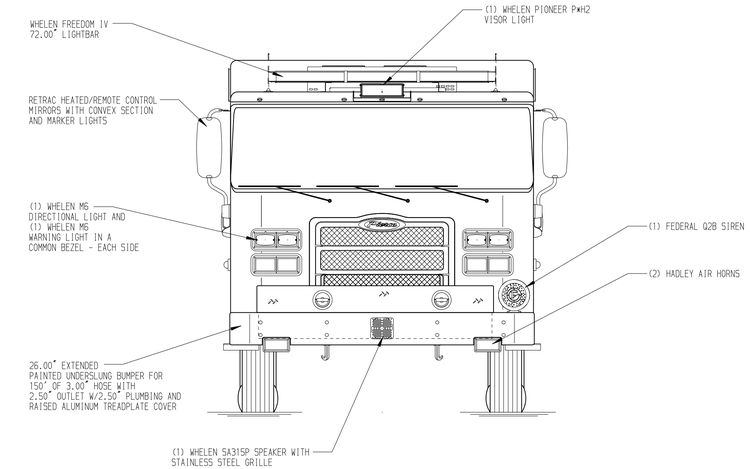

HOSEBED CAPACITIES

1 - 1000' OF 6.00" DJP HOSE
2 - 300' OF 3.00" DJP HOSE
3 - 1000' OF 6.00" DJP HOSE

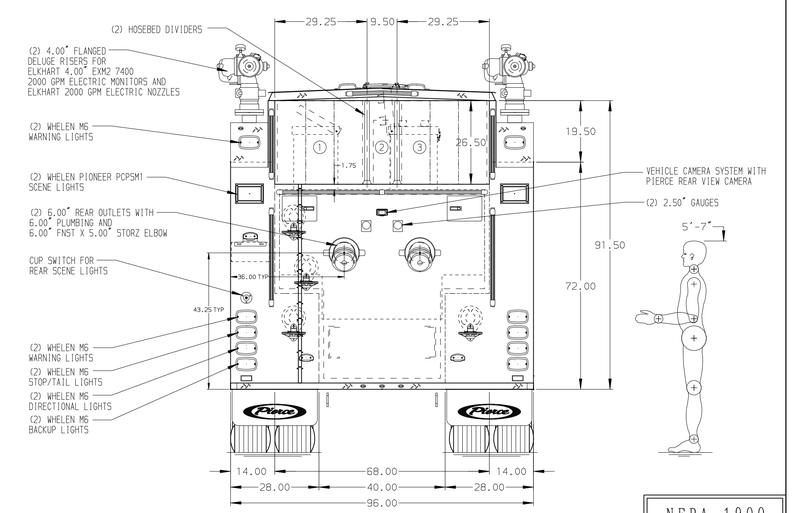

NFPA 1900
(2024)
COMPLIANT

ALUMINUM BODY

REFERENCE: 40668

CUSTOMER APPROVAL

APPROVED BY: _____

DATE: _____

Pierce MANUFACTURING INC.

REV	DATE	BY	CH
▽	22JUL25	SAM	-

CHASSIS DATA — MAKE: PIERCE — MODEL: ENFORCER

TITLE: 3000 GPM, 1250G TANK, 250G WATER, 1000G FOAM 171" BODY, INDUSTRIAL, HARD WIRED

FOR: PIERCE FIELD UNIT APPLETON, WISCONSIN

DWG NO.: 44743AD

JOB NO.	44743
SCALE	1:24
DATE	
DRAWN BY	SAM
	11JUL25
CHECKED BY	PHA
	11JUL25
SHEET SIZE	D
SHEET NO.	1 OF 1

NOTE

DIMENSIONS SHOWN ARE APPROXIMATE AND ARE SUBJECT TO MINOR DEVIATIONS AS MAY OCCUR OR BE NECESSARY IN CONSTRUCTION.
MINOR DETAILS NOT SHOWN.

1. BATTERY CHARGER LOCATED BEHIND DRIVER SEAT