PASSENGER'S SIDE COMPARTMENTS CONTAIN THE FOLLOWING:

COMPARTMENT P1 CONTAINS:
- (1) FLOOR MOUNTED TRAY
- (1) STD DEPTH ADJ SHELF
-

COMPARTMENT P2 CONTAINS:
- (1) VERTICAL COMPARTMENT DIVIDER
- (1) CIRCUIT BREAKER PANEL
- (1) NIGHT SCAN CONTROLLER
- (1) GENERATOR METER PANEL
- (1) STD DEPTH ADJ SHELF
-

COMPARTMENT P3 CONTAINS:
- (1) 1/2 DEPTH ADJ SLIDE OUT/TILT TRAY
- (1) FLOOR MOUNTED TRAY
- (1) REAR WALL COMPARTMENT DIVIDER
- (1) 1/2 DEPTH ADJ SLIDE OUT TRAY
- (4) POLY TOOL BOXES
-
-

COMPARTMENT P4 CONTAINS:
- (1) 1/2 DEPTH ADJ SLIDE OUT/TILT TRAY
- (1) FLOOR MOUNTED TRAY
- (1) CAB LIFT CONTROLLER
- (1) 2-WAY ADJ SLIDE OUT TRAY
- (1) ELECTRIC CABLE REEL W/200' OF 10/3 YELLOW CORD & CAPTIVE ROLLER
-

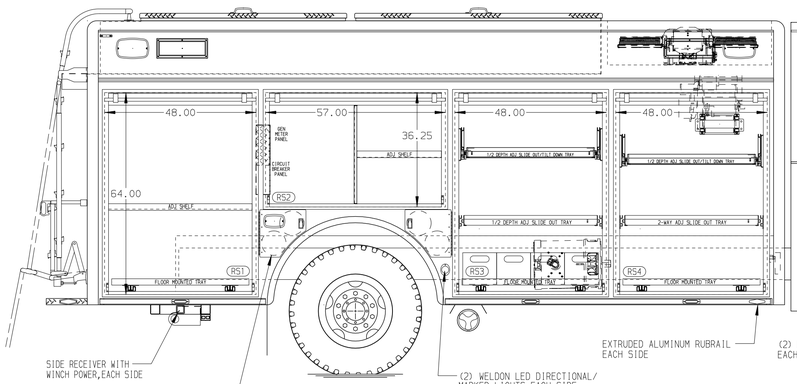

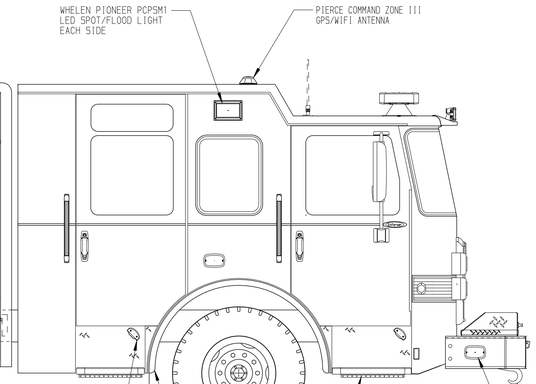

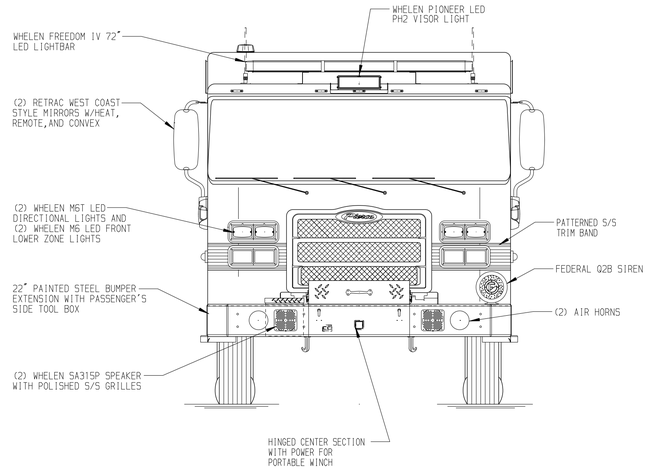

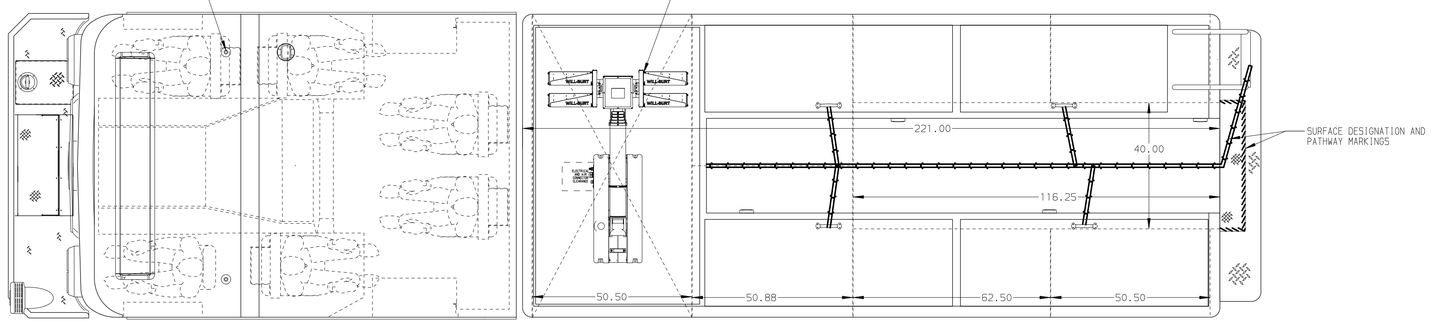

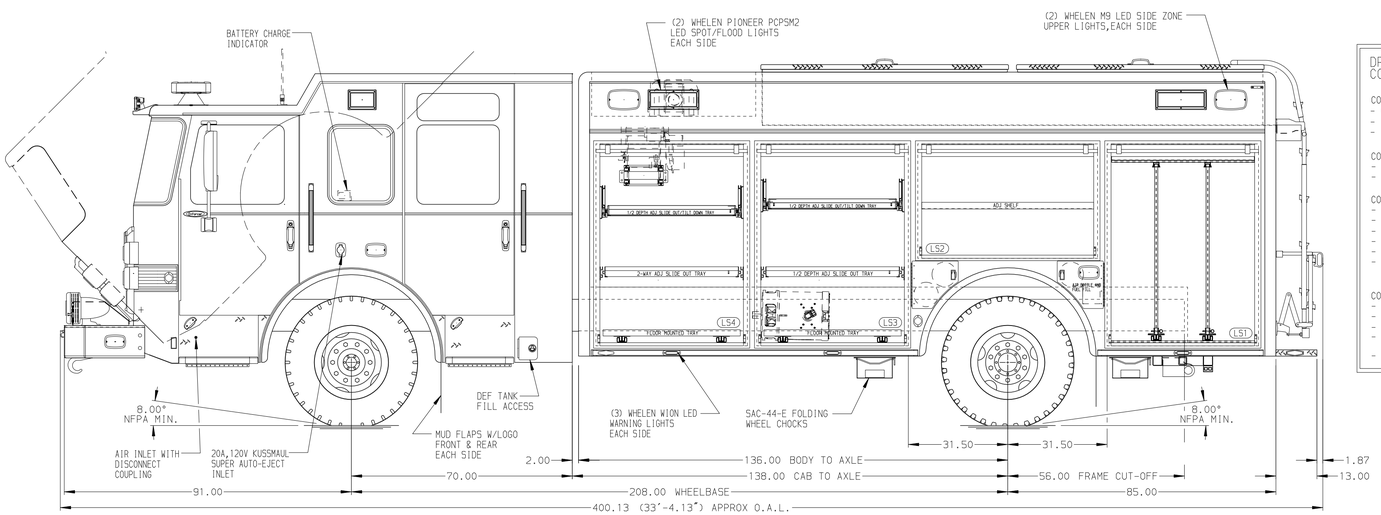

REAR COMPARTMENT CONTAINS THE FOLLOWING:

COMPARTMENT B1 CONTAINS:
- (1) 110"DP SLIDE OUT TRAY
- (1) FLOOR MOUNTED TRAY
- (1) STOKES BASKET RACK
-

DRIVER'S SIDE COMPARTMENTS CONTAIN THE FOLLOWING:

COMPARTMENT D1 CONTAINS:
- (2) STD DEPTH ADJ SLIDE OUT TOOLBOARDS
-
-

COMPARTMENT D2 CONTAINS:
- (1) STD DEPTH ADJ SHELF
-

COMPARTMENT D3 CONTAINS:
- (1) 1/2 DEPTH ADJ SLIDE OUT/TILT TRAY
- (1) 1/2 DEPTH ADJ SLIDE OUT TRAY
- (1) FLOOR MOUNTED TRAY
- (1) REAR WALL COMPARTMENT DIVIDER
-
-

COMPARTMENT D4 CONTAINS:
- (1) 1/2 DEPTH ADJ SLIDE OUT/TILT TRAY
- (1) 2-WAY ADJ SLIDE OUT TRAY
- (1) FLOOR MOUNTED TRAY
- (1) ELECTRIC CABLE REEL W/200' OF 10/3 YELLOW CORD & CAPTIVE ROLLER
-

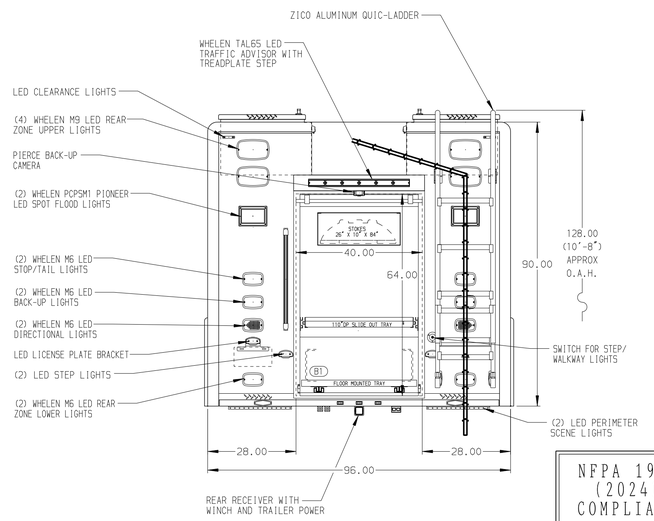

NOTE

DIMENSIONS SHOWN ARE APPROXIMATE AND ARE SUBJECT TO MINOR DEVIATIONS AS MAY OCCUR OR BE NECESSARY IN CONSTRUCTION.
MINOR DETAILS NOT SHOWN.

NOTES:
1. WARN #10,000 PORTABLE WINCH
2. FLOOR IN CAB AND CREW CAB TO BE PADDED RUBBER
3. ELASTIC PULL STRAPS ON ALL BODY ROLL UP DOORS
4. PIERCE LED LIGHT STRIPS IN ALL BODY AND HATCH COMPARTMENTS
5. KUSSMAUL 60 AMP BATTERY CHARGER LOCATED BEHIND THE DRIVER'S SEAT
6. S/S GUARDS ON ALL BODY ROLL-UP DOORS
7. HARRISON 25kW SINGLE PHASE PTO DRIVEN GENERATOR WITH SPLASH GUARD LOCATED BETWEEN THE FRAME RAILS

SIDE ROLL AND FRONTAL IMPACT PROTECTION

CLEAR DOOR WIDTH KEY	
AMDOR ROLL UP DOORS:	-2 1/4"
GORTITE ROLL UP DOORS:	-2 1/2"
PIERCE DOUBLE LAP DOORS:	-4 1/4"
PIERCE LIFT-UP LAP DOORS:	-1 1/2"
(EX: 60"F-F - 2 1/4"= 57 3/4" CLEAR) (F-F)= FRAME TO FRAME	

REV	DATE	BY	CH
V	08JAN26	DHE	AST

CUSTOMER APPROVAL
APPROVED BY:
DATE:

Pierce MANUFACTURING INC.

CHASSIS DATA	TITLE	HEAVY DUTY RESCUE NON-WALKIN	JOB NO. 45232
MAKE PIERCE	FOR	PIERCE FIELD UNIT BID #3003	SCALE 1:24 / DATE
MODEL EN7010		PIERCE MANUFACTURING INC ANDREW STURM	DRAWN BY DHE / 29SEP25
DWG NO. 45232AD			CHECKED BY GFI / 6OCT25
			SHEET SIZE D / SHEET NO. 1 OF 1

NFPA 1900 (2024) COMPLIANT

View File Created 09-JAN-2026 11:37:41