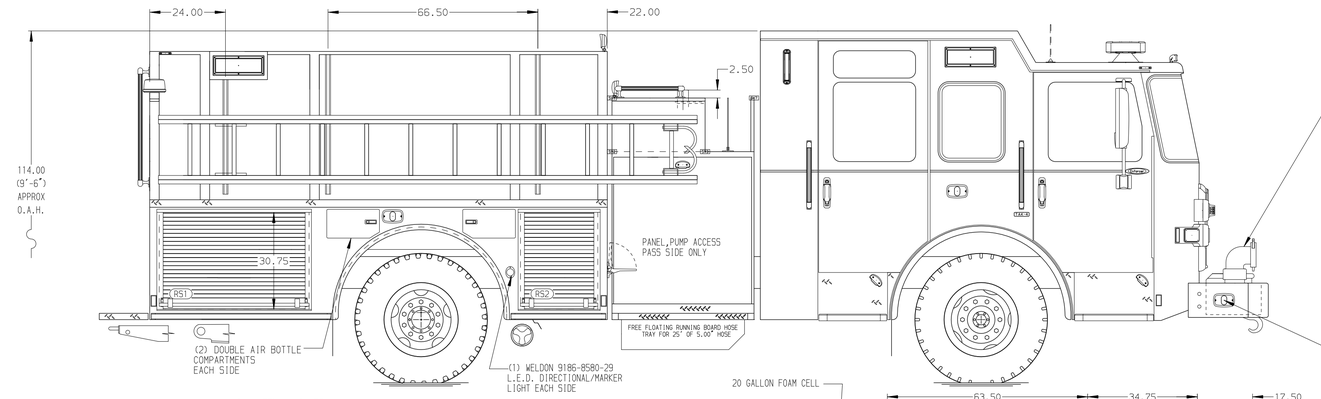

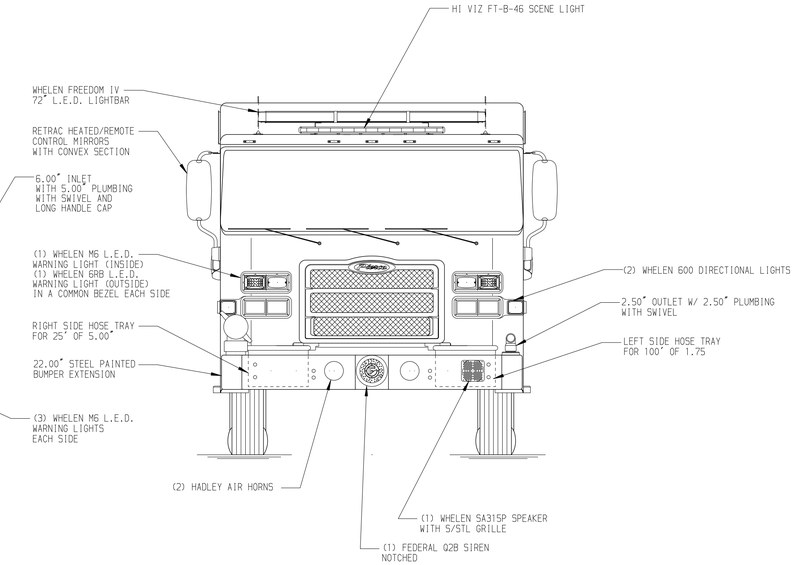

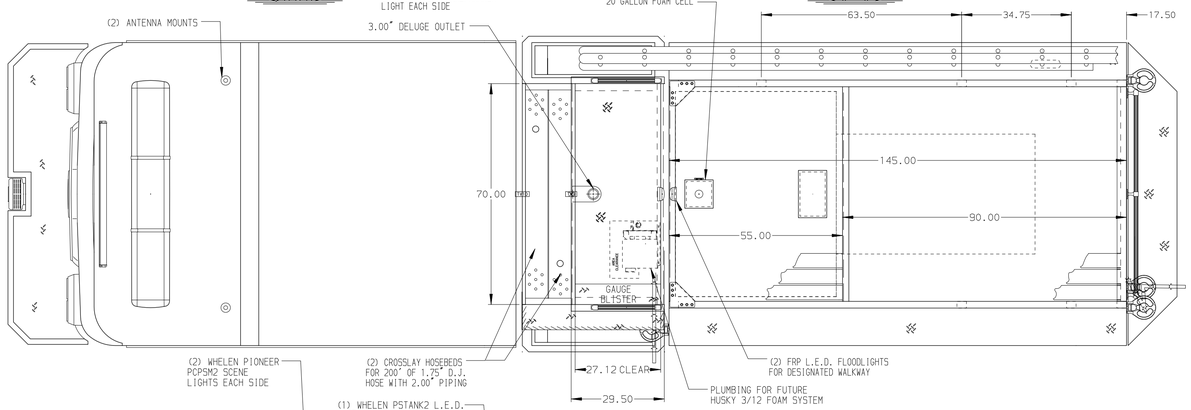

HOSEBED CAPACITIES

1. 200' OF 1.75" D.J. POLY HOSE
2. 400' OF 2.50" D.J. POLY HOSE
3. 1000' OF 5.00" D.J. POLY HOSE
4. 200' OF 1.75" D.J. POLY HOSE

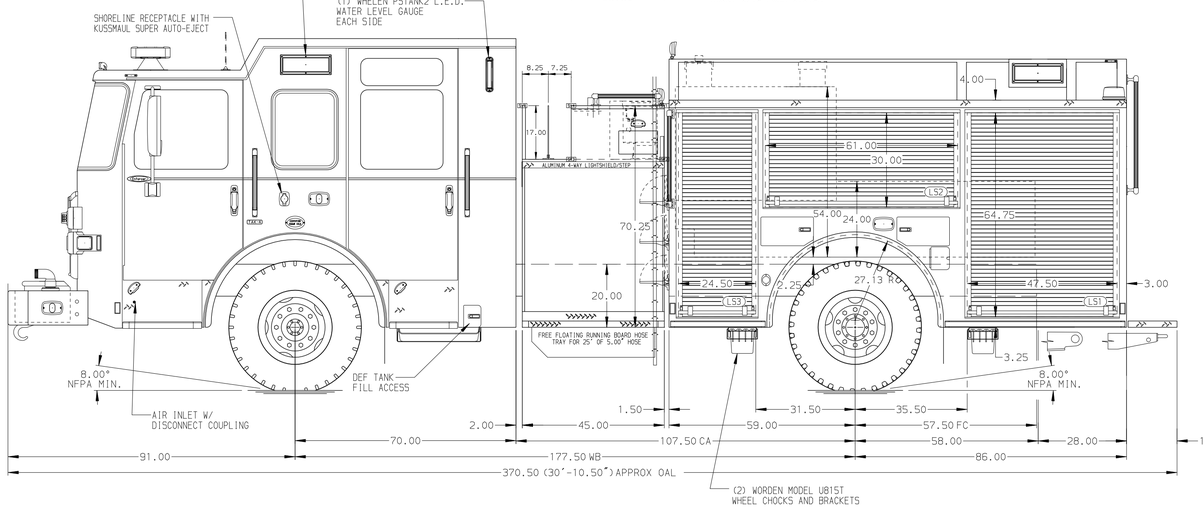

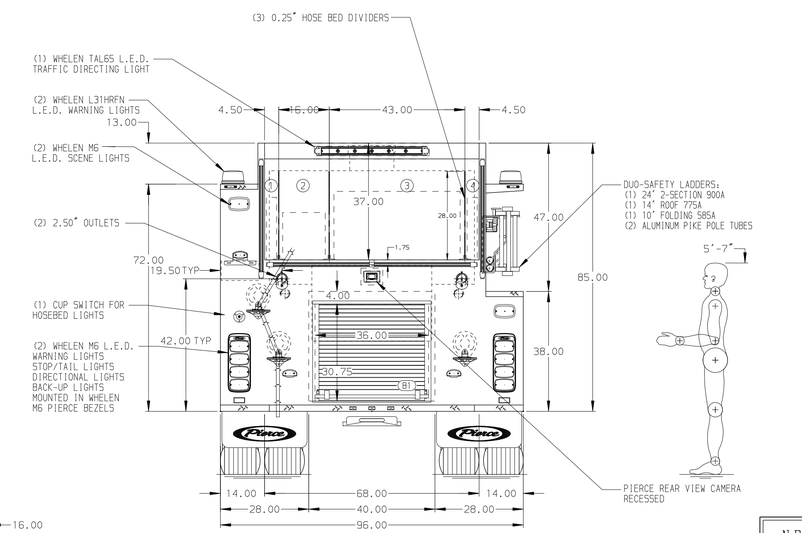

NFPA 1900 (2024) COMPLIANT

ALUMINUM BODY

SIDE ROLL AND FRONTAL PROTECTION

NOTE

DIMENSIONS SHOWN ARE APPROXIMATE AND ARE SUBJECT TO MINOR DEVIATIONS AS MAY OCCUR OR BE NECESSARY IN CONSTRUCTION.
MINOR DETAILS NOT SHOWN.

REV	DATE	BY	CH
▽	-	-	-

CHASSIS DATA	TITLE	1500GPM, 770G TANK, 750G WATER, 20G FOAM 145" BODY PUMPER 2G, HARDWIRED	
MAKE: PIERCE	FOR	PIERCE FIELD UNIT BRADENTON, FLORIDA	
MODEL: ENFORCER	DWG NO.	45794AD	

Pierce MANUFACTURING INC.

JOB NO.	45794
SCALE 1:24	DATE
DRAWN BY TYB	09APR26
CHECKED BY -	-
SHEET SIZE D	SHEET NO. 1 OF 1

View File Created 09-APR-2026 13:22:03