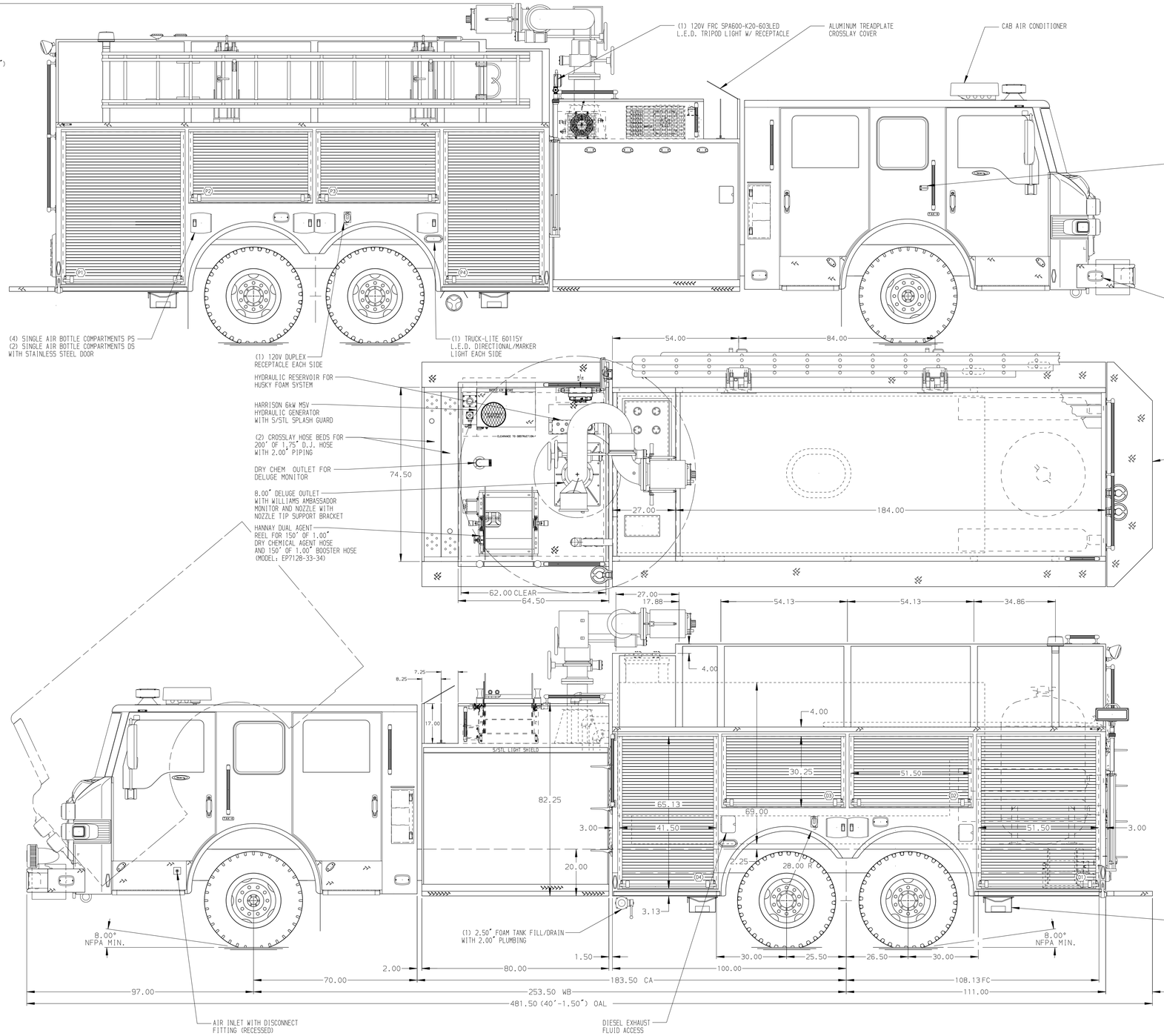

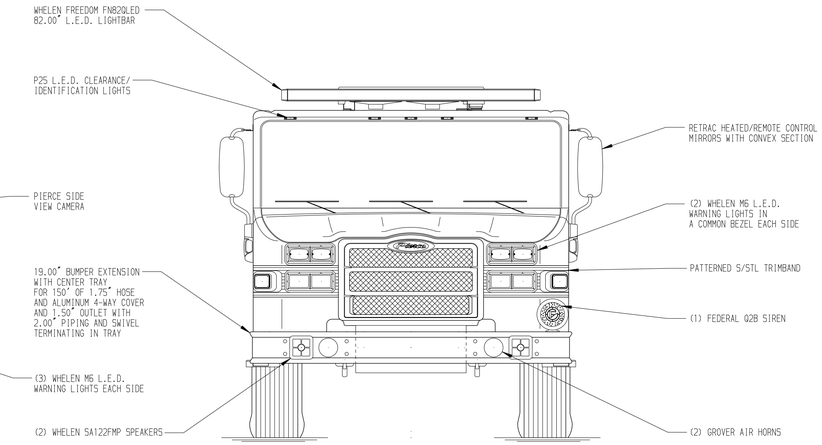

HOSEBED CAPACITIES

1. 200' OF 3.00" D.J POLY HOSE
2. 200' OF 3.00" D.J POLY HOSE
3. 200' OF 3.00" D.J POLY HOSE
4. 800' OF 5.00" D.J POLY HOSE
5. 200' OF 3.00" D.J POLY HOSE
6. 200' OF 3.00" D.J POLY HOSE
7. 200' OF 3.00" D.J POLY HOSE

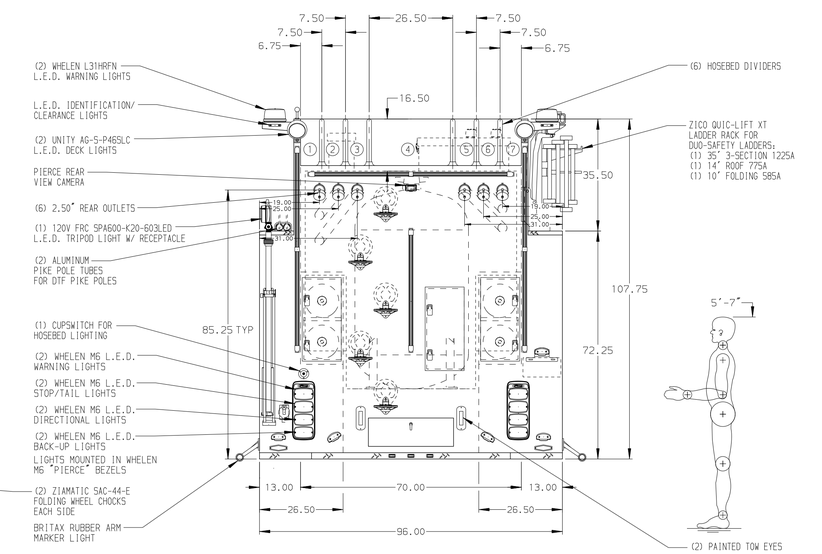

ALUMINUM BODY

NOTE

DIMENSIONS SHOWN ARE APPROXIMATE AND ARE SUBJECT TO MINOR DEVIATIONS AS MAY OCCUR OR BE NECESSARY IN CONSTRUCTION.
MINOR DETAILS NOT SHOWN.

1. ALUMINUM TREADPLATE EXTERIOR REAR WALL OF CAB
2. BATTERY CHARGER LOCATED IN COMPARTMENT P4
3. PIERCE L.E.D. DUAL COMPARTMENT LIGHT STRIPS LOCATED PER SHOP ORDER
4. PAINTED SHELF TRACKS LOCATED IN COMPARTMENTS D1, D4, P1, & P4
5. ONE FULL WIDTH/DEPTH PAINTED ADJUSTABLE SHELF IN COMPARTMENTS D1, P1, & P4; AND TWO IN D4
6. ALL FOLDING STEPS TO BE TRIDENT WITH INTEGRATED L.E.D. LIGHT UNLESS SPECIFIED
7. ONE 120V SHORELINE RECEPTACLE W/ KUSSMAUL SUPER AUTO EJECT LOCATED IN DS PUMP PANEL
8. CIRCUIT BREAKER PANEL IN COMPARTMENT D4
9. ONE AKRON ELECTRIC REWIND CORD REEL LOCATED IN COMPARTMENT D1 WITH 200' OF 10/3 CABLE
10. S/STL FENDER CROWNS FRONT AND REAR
11. PIERCE LOGO MUDFLAPS FRONT AND REAR
12. 2000# DRY CHEMICAL STORAGE TANK AND (4) NITROGEN BOTTLES LOCATED REARWARD OF WATER/FOAM TANK
13. PERIMETER SCENE LIGHTS LOCATED PER SHOP ORDER
14. WHELEN L.E.D. HOSEBED LIGHTS LOCATED PER SHOP ORDER
15. ONE 63" L.E.D. LIGHT STRIP LOCATED ON FRONT HOSEBED CROSS DIVIDER
16. STORAGE RACK FOR (4) AIR BOTTLES LOCATED IN COMPARTMENT D1

REV	DATE	BY	CH
3	01AUG14	COL	ANG
2	19JUN14	COL	ANG
1	11APR14	COL	MNE

CHASSIS DATA	
MAKE	PIERCE
MODEL	VEL7000

Pierce MANUFACTURING INC.

TITLE	3000-D-2500P, 2000 GAL FOAM & 500 GAL WATER (2)XLAYS, DELUGE, GENERATOR, 211" TANKER
FOR	JACK DANIELS BOTTLING LYNCHBURG, TENNESSEE
DWG NO.	27851AD

JOB NO.	27851
SCALE	1:24
DATE	
DRAWN BY	COL 25MAR14
CHECKED BY	MNE 26MAR14
SHEET SIZE	D
SHEET NO.	1 OF 1

View File Created 22-JUN-2016 11:31:41